Power Off Brake Backlash

Rocco Dragone, Deltran Product Specialist
Thomson Industries, Inc.
Wood Dale, IL
540-633-3549
Thomson@thomsonlinear.com
www.thomsonlinear.com

Power Off Brakes, sometimes referred to as Safety Brakes, Spring Set Brakes or Fail Safe Brakes, are widely used in the industry, usually on the back of motors, to hold a machine, pulley, Z axis, or robotic arm in position in case of a power failure.

There are many application and technical issues that arise when it comes to utilizing Power Off Brakes. One of the most common issues has to do with backlash in the brake, or what is described as lash, free play, or lost motion. Backlash is defined as how much or how many degrees (+and-) the shaft will rotate (lost motion) while the brake is holding (no power). This depends on the type of "hub" or "drive".

Power Off Brakes are available with a variety of coupling or "hub" designs. The hub is the part that attaches to the Motor or driven shaft. Power Off Brakes generally rely on a "floating" hub interface so that the brake's rotor assembly actually floats when there is power applied (motor at full running RPM).

In general there are four types of "drives":

Hex or some polygon shape (square, octagon)

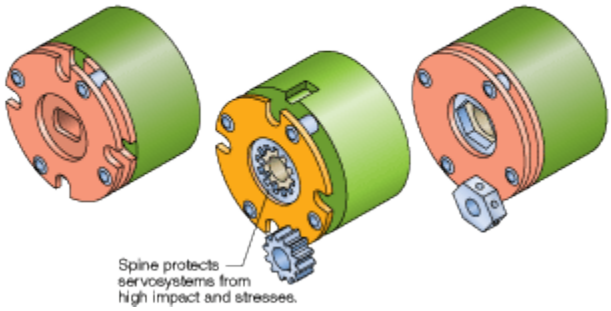

Illustration courtesy of Motion System Design magazine.

With a hex or square drive, in order for the rotor (friction disc) to "float" the mating parts, the hub and hole in the rotor need to have sufficient clearances. When designing for the fit, some misalignment resulting from geometrical dimensioning and tolerances

must be taken into consideration. In the worst case there should always be at least .002 in. clearance per side. Also the inertial load of the motor or drive must be taken into consideration so that when the brake engages it does not leave stress marks or indentations in the mating parts.

<u>"D" or Double "D"</u>

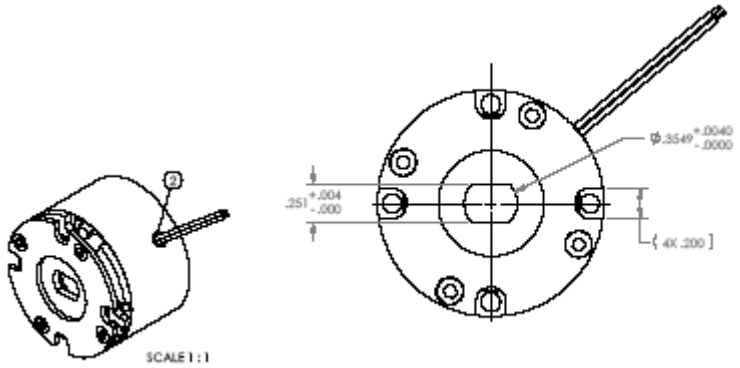

A "D" drive has a round shaft with a flat ground into it, and a "Double D" is simply two "D" drives back to back. "Double D" characteristics are the same as a hex/square drive. Much like a square drive, it has two points of contact that can over stress the rotor at two points if the inertial load is not taken into considering when specifying the brake.

<u>Spline</u>

Similar to a gear, the spline drive's hub has a male set of "teeth" on the OD that match up to the female set of teeth on the ID of the rotor. There are straight splines and involute splines. Involute splines provide a better sliding fit and are held to closer tolerances (Ref: American Standard B-92.1a….) Backlash (no load) can normally be between .25º for small brakes (1.5 Diameter) to 1ºfor larger brakes (5" Diameter).

The spline drive has the least backlash out of the aforementioned drives. Usually a "Flat Root Side Fit" spline is used and the clearance is minimized at the sides of the teeth while

the ID and OD have significant clearance to minimize backlash. There are literally thousand of spline sizes available – the smaller are most commonly used in smaller brakes and may have a clearance in the range of .0015 in. - .003 in., while the larger can have double this clearance range. Clearance range will also vary depending on the class of fit.

As shown in the figure below the side fit spline keeps the clearance tight on the sides of the spline, which minimizes backlash. This type of fit is most commonly used in all types of industrial equipment.

Involute Splines

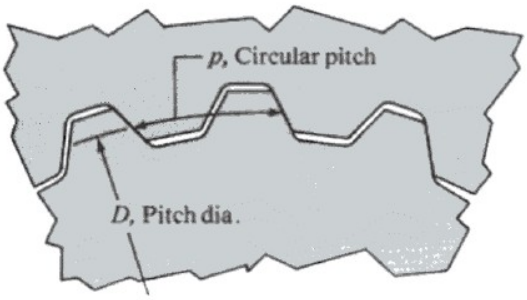

(a) Side-fit spline

N = Number of spline teeth
P = Diametral pitch
$D = N/P$ = Pitch dia.
$p = \pi/P$ = Circular pitch

Minor dia.:
Internal: $\frac{N-1}{P}$
External: $\frac{N-1.35}{P}$

Zero Backlash Drive

A "Zero Backlash" drive is comprised of a hub fixed to a flexible diaphragm or spring. Its rotor assembly has the least backlash because there is a rigidly mounted diaphragm type spring mounted to a hub. These drives have no play between the shaft, attachment hub, or rotor (friction disc), but under half the load there will be some free movement until the armature plate is moved up against the spacers (see Q&A 2 below).

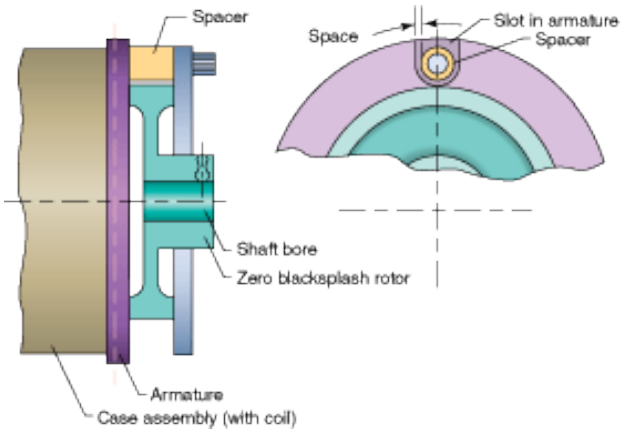

Illustration courtesy of Motion System Design magazine.

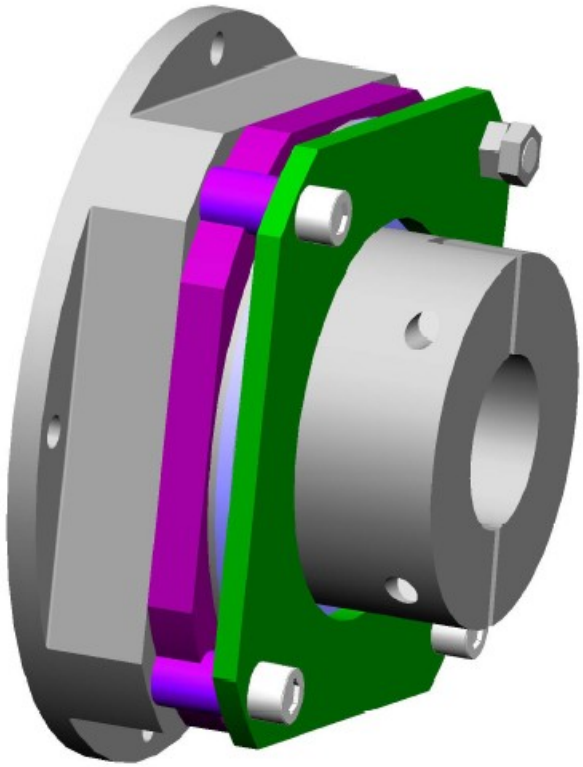

View of a ZERO Backlash brake – shows spacer

Power Off Brake Questions & Answers

Q. If I am using a servomotor with a power off brake along with a gear reducer that has a backlash of 10 arc minutes max, do I need to be concerned about the backlash of the brake?

A. Yes - the backlash increase at the output. For example if the ratio is 10 to 1, one revolution at the input of the gearbox will yield 1/10 revolutions at the output. The same is true for 1º of backlash at the input will yield 1/10º at the output.

Q. Will the backlash be the same under some unknown friction load at the output, or will the backlash increase?

A. The backlash will increase under load, sometimes referred to as torsional stiffness or torsional rigidity). Power Off Brakes have internal clearances built into them to allow the units to function; when the brake is energized, the armature is pulled up against the case assembly that houses the coil.

The armature plate is usually guided and held from rotating with the use of spacers or pins as guides. At one half of the static torque the armature plate will slide to one side taking up all the clearances, and the outcome is more backlash.

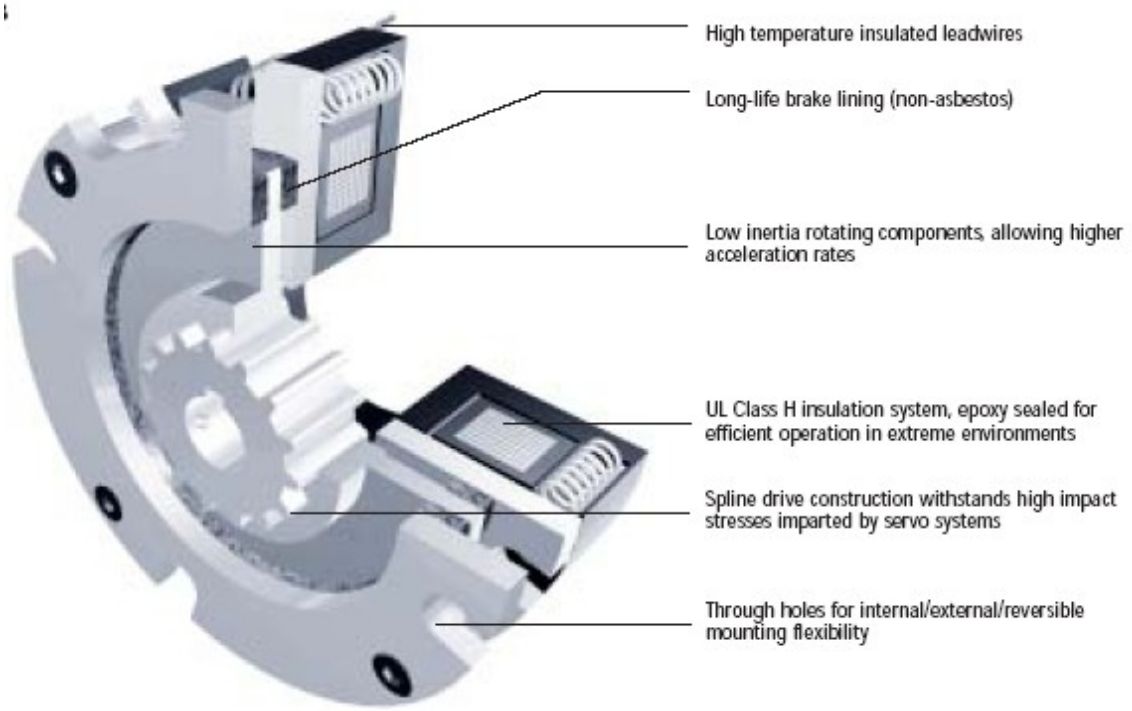

Q. What design would be least expensive?

A. Most Power Off Brake designs are available with the hubs and drives noted above. The cost is primarily related to the manufacturing process of the component parts, and typically simple shapes are less expensive than spline or zero backlash drives.

Depending on the size of the shaft vs. the size of the brake, in some cases the "hub" can be eliminated altogether with the shaft driving the rotor. For example, in the case of a "Double D" configuration the brake will not require the intermediate hub. The drive shaft needs to have two flats 180º from each other. This is less expensive than milling or holding a shape or spline in the shaft.