

Linear Actuators

Electric Solutions for Faster Delivery Manufactured in China

www.thomsonlinear.com

THOMSON®

A REGAL REXNORD BRAND

Thomson – Engineering Linear Motion for a Rapidly Evolving World

From precision linear motion solutions to fully integrated actuation systems, Thomson delivers intelligent, clean and efficient motion to help customers compete and scale. Whether your application demands speed, load capacity, controllability, compact design or long-term reliability, we help you design the right solution, not just the right part.

Thomson stands apart through:

- One of the industry's most comprehensive portfolios of linear motion and actuation solutions.
- Engineered-to-fit solutions, from configurable standards to application-specific designs developed in close collaboration with your team.
- Eighty years of proven application expertise across medical, industrial automation, aerospace and defense, mobile off-highway, material handling, transportation, robotics and more.

Engage with our engineering teams early to reduce design cycles, improve system integration and maximize long-term value. Product and application information, 3D models, sizing and selection tools, and global contact information are available at thomsonlinear.com

RegalRexnord™

As a leading brand of Regal Rexnord, Thomson uniquely connects linear and actuation solutions with motors, controls, power transmission and drive technologies for enabling smarter integration, expanded design flexibility and enterprise-level support worldwide. Together with Regal Rexnord's 30,000 associates around the world, we help create a better tomorrow with sustainable solutions that power, transmit and control motion.

Local Support Around the Globe



Table of Contents

Introduction **4**
Leveraging Decades of Design and Application Expertise 4
Why Choose a Thomson Actuator? 6
Why Convert to Electric Actuators? 8
Smart Actuators 10
Applications 12
Online Sizing and Selection Tools 14

Performance Overview **16**

Linear Actuators **18**
Electrak 10 18
Electrak LA14 26
Electrak 050 34
Electrak Throttle 40
M-Track 1 48

Glossary **55**

Leveraging Decades of Design and Application Expertise

The history of Thomson actuators goes back to the mid-1960s when American engineers used ball screws to build the first generation of electric linear actuators. These were developed for control of accessory drives on garden tractors and farm equipment. Since that simple beginning, actuators are now used in all types of equipment to automate processes, remove people from dangerous situations, provide remote control, and make difficult, tedious or manual jobs easier.



1967
The first electric linear actuators, designed for agricultural equipment, are released.



1974
First line of actuators with parallel motors are released.



1982
The **Electrak 10** actuator line is released.



1984
Electrak 1 - the miniature actuator is released.



1991
The first series of **lifting columns** are released.



Today, Thomson is the market leader for electric linear actuators used in the most demanding applications, including construction and agriculture vehicles. We routinely collaborate with OEMs globally to solve problems, boost efficiency and enhance the value passed on to their customers.

Call us today to discuss how our vast offering of standard or custom solutions can deliver the optimal balance of performance, life and installed cost for you and your applications.

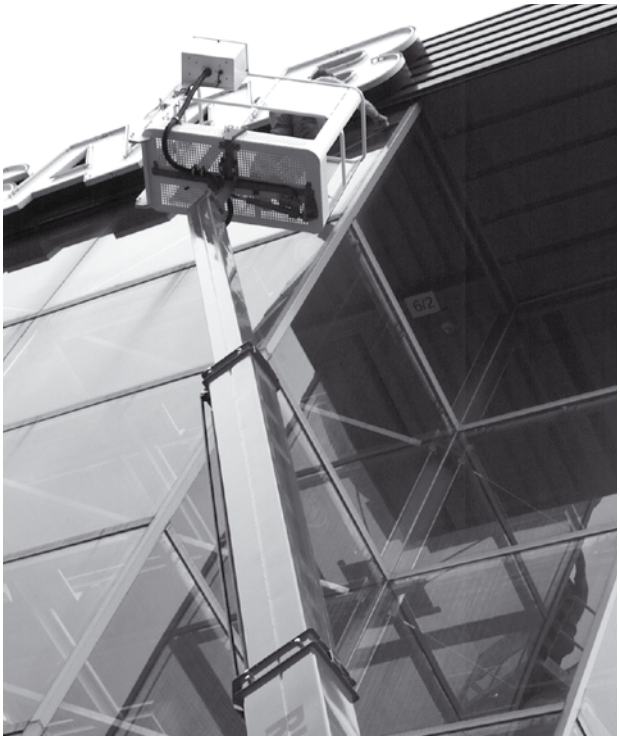



Thomson actuators help people every day at home or work, during commuting, or when visiting the doctor, dentist or therapist.

1999
Electrak 050 is released.



2000
The rodless **LM80 actuator** is released.



2013
Electrak Throttle and **Max Jac** are released.

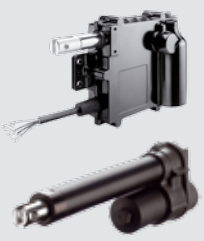

2016
Electrak HD is released.



2019
Electrak GX is released.



2020
Electrak MD is released.



Why Choose Electric Linear Actuators?

Electric linear actuators are versatile, easy to use and affordable compared to most alternatives. As long as electric power is available, there is likely a suitable electric actuator for the job. The latest generation of actuators, which are smarter, stronger and sturdier, have also created new application possibilities. Where you once had to look for expensive, complex and often custom-built solutions, a standard electric actuator is often now the simple choice.

An electric actuator is often the easiest way to move from manual to powered motion since electricity is the easiest and most readily available power source. It doesn't matter if electricity is from the grid, a battery or any other source since there are actuators for both AC or DC in all the most common voltages. Plug in and run - it is often as simple as that.

Smaller, Stronger and More Robust

Electric motors, drives and batteries have experienced huge technological leaps forward over the past few decades, and the trend of making electric actuators more powerful and efficient continues. At the same time, actuators have become better sealed and more robust, allowing them to be used in even the toughest environments.

Clean, Maintenance-Free Operation

Thomson actuators are inherently clean since there are no messy compressors, filters, oils or other mediums involved. Most of them are, in fact, clean enough to be used right out of the box in areas sensitive to contamination. Thomson electric actuators are also completely maintenance free - there is no need to remember to check or replace anything, and they don't carry hidden ownership costs, sparing you of any unpleasant surprises throughout their lifetime.







Modern actuators can work in almost any environment

Smart Actuation

At Thomson, smart actuators all feature integrated onboard controls, enabling a level of control that traditionally required complex external componentry. This advanced controllability allows you to monitor performance and perform diagnostic checks on the fly to help increase efficiency and productivity.

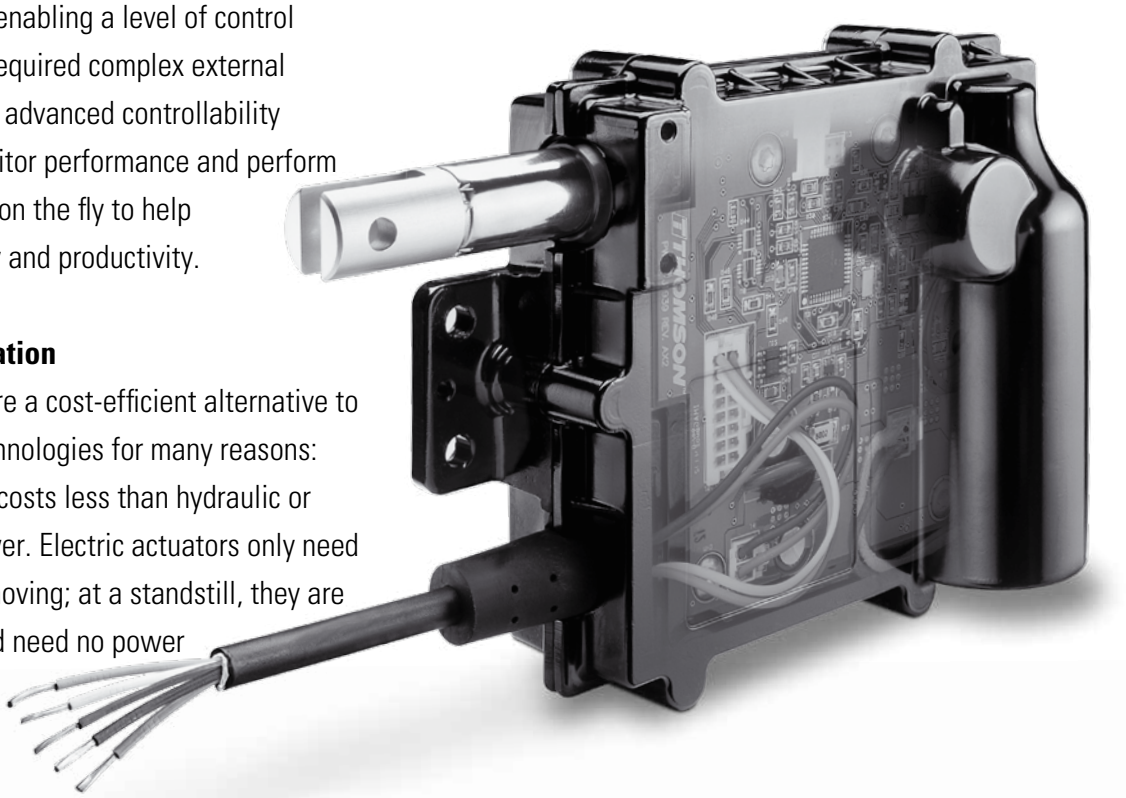

Affordable Actuation

Linear actuators are a cost-efficient alternative to other actuator technologies for many reasons:

- Electric power costs less than hydraulic or pneumatic power. Electric actuators only need energy when moving; at a standstill, they are self locking and need no power to keep the position.
- Cables are less expensive than tubes and hoses.
- Cables are a lot quicker and easier to install and commission.
- An electric actuator system is lightweight and requires little space.
- Less or eliminated maintenance reduces total cost of ownership.



The “smart” Electrak Throttle and Electrak HD actuators

Why Convert to Electric Actuators?

There are many reasons to switch from pneumatic or hydraulic actuators to electric solutions. Improved controllability, reduced system complexity and a smaller footprint are often the primary drivers. These advantages are complemented by lower energy consumption, cleaner operation and reduced maintenance, along with additional benefits such as improved performance, reduced downtime, and faster assembly and commissioning.

Better Controllability
An electric motor paired with a lead or ball screw is significantly easier to implement than a pneumatic or hydraulic cylinder, as it typically requires little more than electrical power to operate. Electric actuators are easier to control, responding faster, delivering greater accuracy, and eliminating creep at standstill or during power-off. They are also readily equipped with onboard feedback and control capabilities, enabling straightforward integration with higher-level systems.

Modular Control Concept
State-of-the-art electric actuators, such as the Thomson Electrak HD, have a modular control architecture and can be ordered with anything from a simple motor to full bus communication functionality that let you control and monitor every aspect of the actuator and its performance.

Reduced Costs and Improved Sustainability
Electric actuators deliver measurable cost and sustainability benefits, including:

- Increased energy efficiency and environment-friendly features
- No need for costly compressors and the supporting infrastructure
- Cleaner and safer to use in places sensitive to contamination
- No risk of leaks – small, undetected leakages add hidden costs, while larger leaks can be hazardous, messy and costly
- No maintenance required, reliable and easy to replace if necessary
- Quick and simple to install and commission

ELECTRIC LINEAR ACTUATORS

IMPROVE

EFFICIENCY
RELIABILITY
PRODUCTIVITY
PERFORMANCE
CONTROLLABILITY

REDUCE

COMPLEXITY
ENGINEERING
COMPONENTS
OVERALL COSTS
INSTALLATION TIME

Reduced Complexity and Smaller Footprint

The illustration below compares three common approaches for operating an electric actuator, a pneumatic cylinder and a hydraulic cylinder.

It appears obvious that both the pneumatic and hydraulic cylinder require more complex, spacedemanding solutions that add more weight to the complete system.

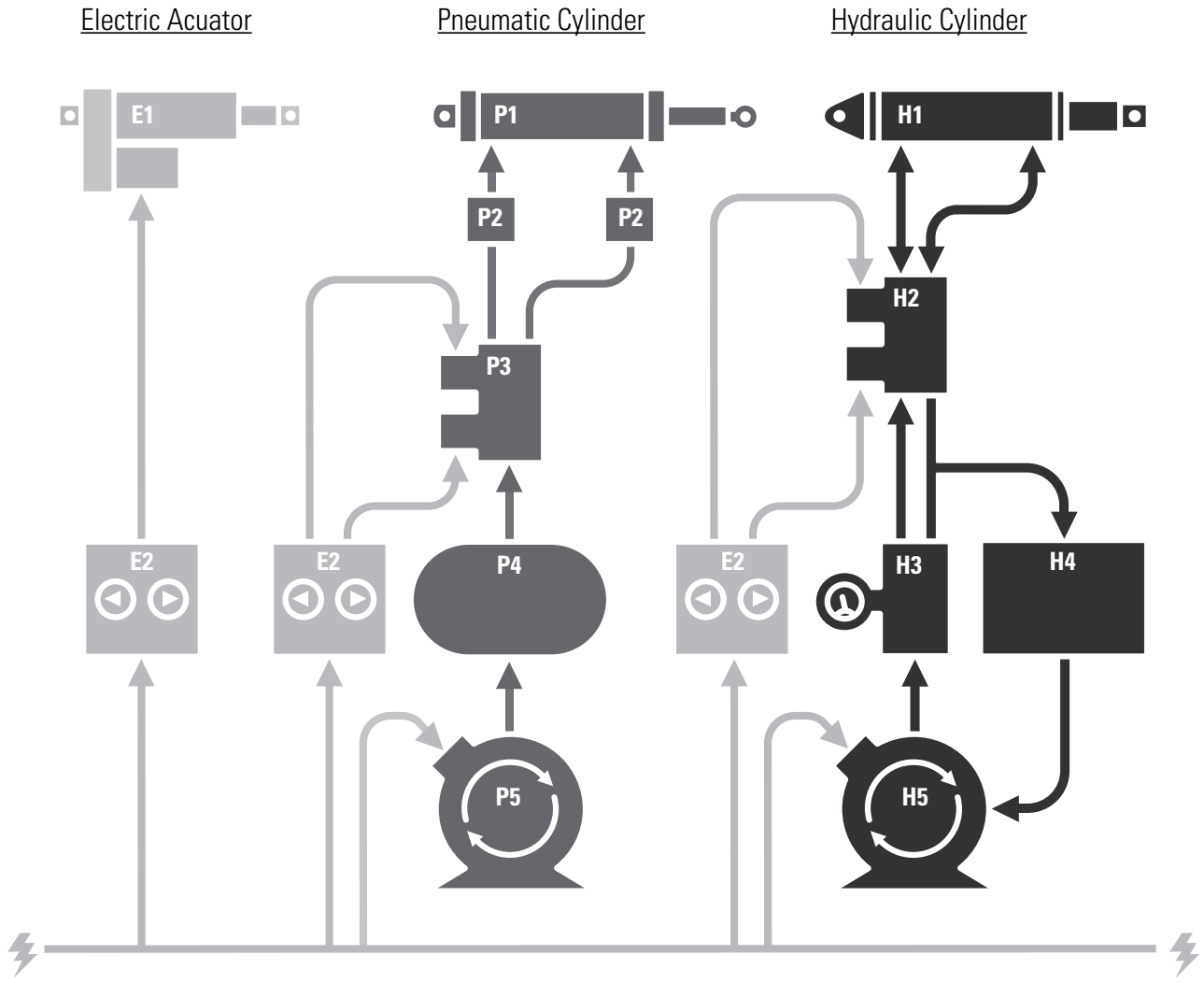

E1. Electric linear actuator
E2. Electric switches

P1. Pneumatic cylinder
P2. One-way flow control valves
P3. Bidirectional valve
P4. Compressed air tank
P5. Pneumatic air compressor

H1. Hydraulic cylinder
H2. Bidirectional valve
H3. Pressure relief valve
H4. Hydraulic oil reservoir tank
H5. Hydraulic oil compressor

Smart Actuators

As the industrial world becomes increasingly connected, the need for intelligent components that can communicate and operate independently is growing. Thomson is meeting this demand with our smart actuators in which modular onboard controls and bus communication are key features.

Smart Actuator Benefits

- Increased efficiency and productivity
- Fewer components and less cabling
- Minimized complexity and easier installation
- Reduced hardware and software costs
- Decreased machine development time
- Reduced overall system weight
- Improved machine functionality and performance
- Bus communication between host control and actuators
- Position-based synchronization without having to add extra external controls
- Improved, more accurate controllability
- Speed and force control
- Enhanced diagnostic and monitoring capabilities

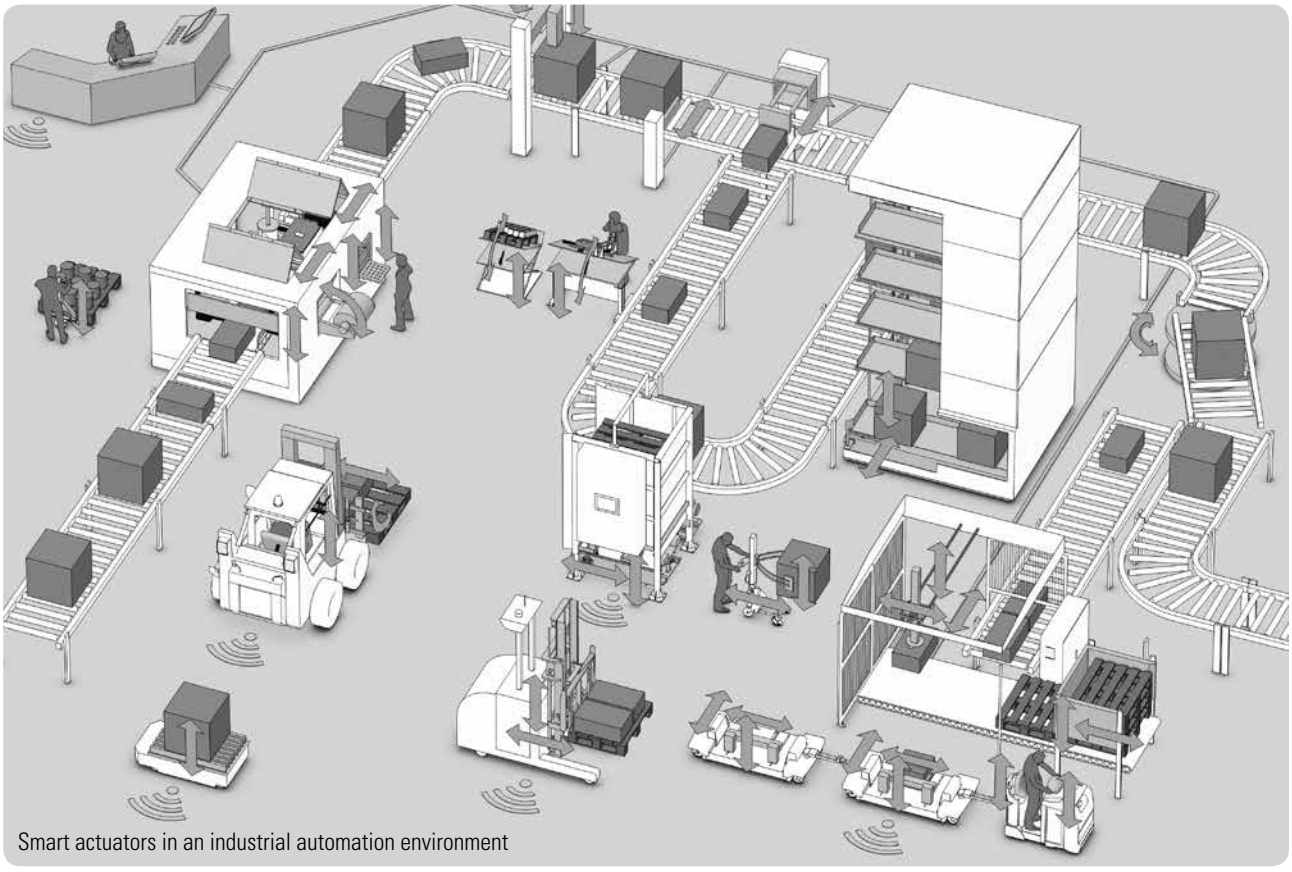

Smart actuators in an industrial automation environment

Learn more about smart actuators at www.thomsonlinear.com/smart

Traditional vs. Smart Systems

Traditional System

Each actuator is controlled by the host individually. By using control boxes, switches, sensors and position feedback devices, the host controls and keeps track of each actuator.

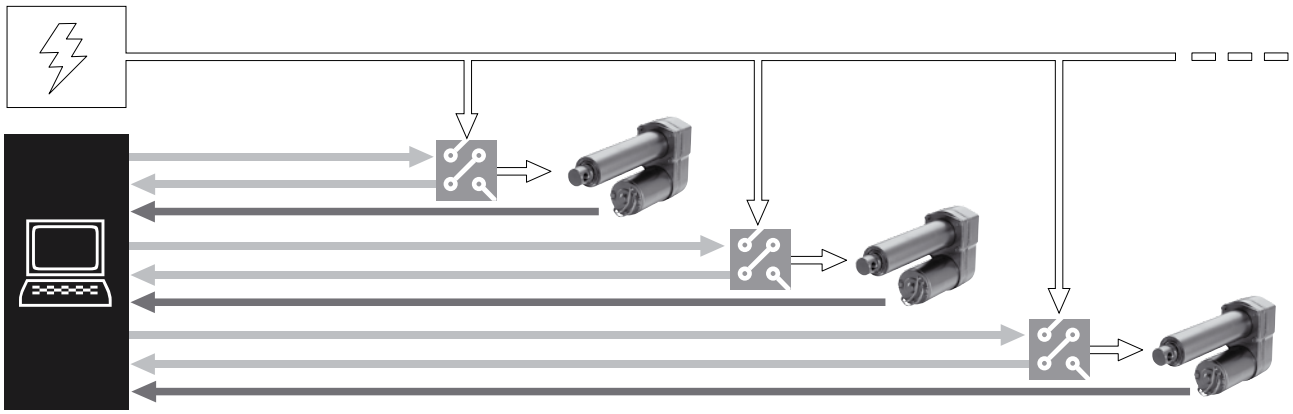

Bus Communication System

All actuators speak to the host control over the same bus, and each actuator does what it is commanded to and reports back when done or if something goes wrong.

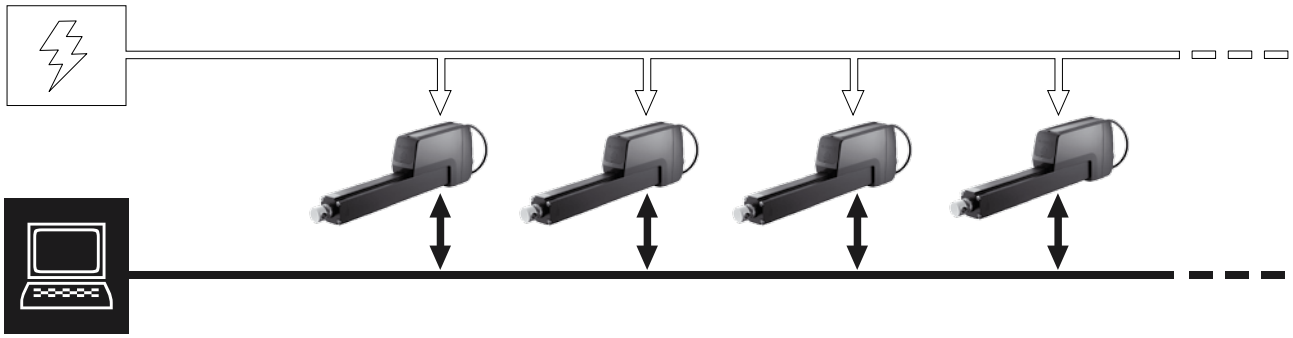

Synchronization System

The host control runs one actuator, which becomes the master. The other actuators follow the master as slaves without having to communicate with the host control.

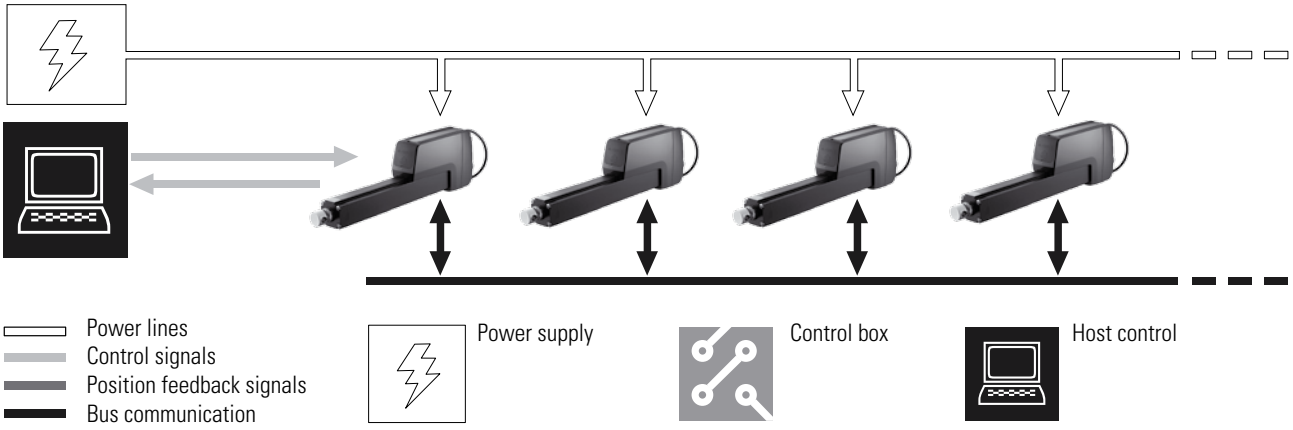

Applications

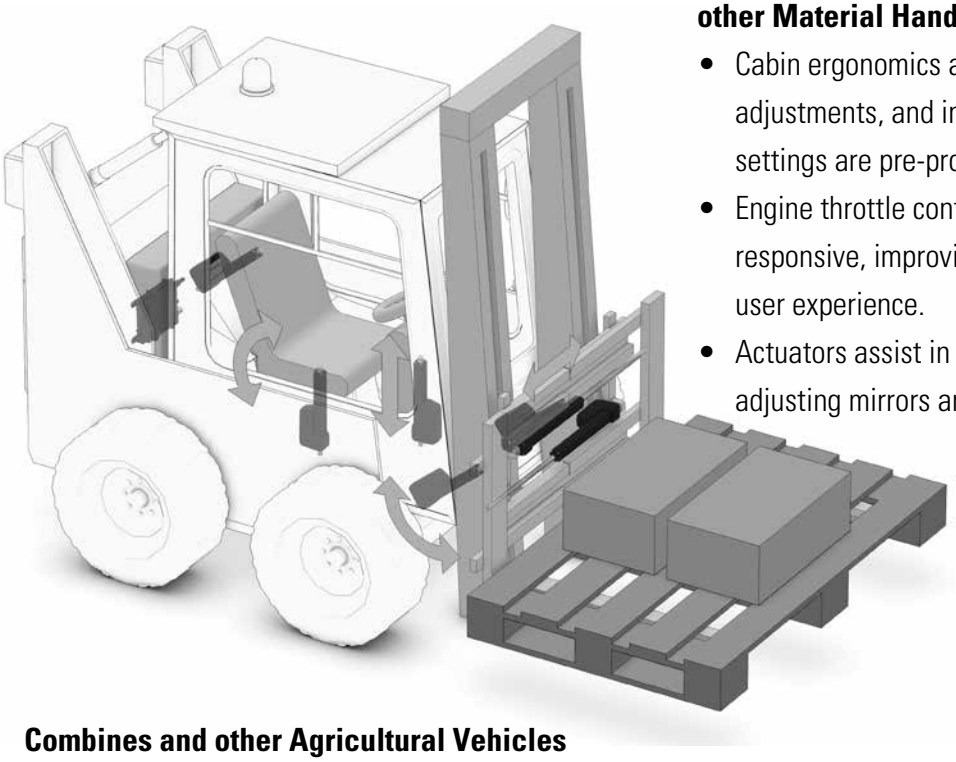

Lifting Devices, Fork Lifts, Driver Cabins and other Material Handling Vehicles

- Cabin ergonomics are improved with seat adjustments, and individual, user-defined settings are pre-programmed for quick changes.
- Engine throttle control is more precise and responsive, improving fuel consumption and the user experience.
- Actuators assist in opening hoods and doors, and adjusting mirrors and ladders.

Combines and other Agricultural Vehicles

- Electromechanical actuation is ideal for hard-toreach places that may require complex control to function.
- Integrated electronics allow you to drop in an actuator where a more complicated control scheme for hydraulics or air would have been previously.
- Common applications include sieve leveling, auger tube fold, hood lift and grain bin cover.

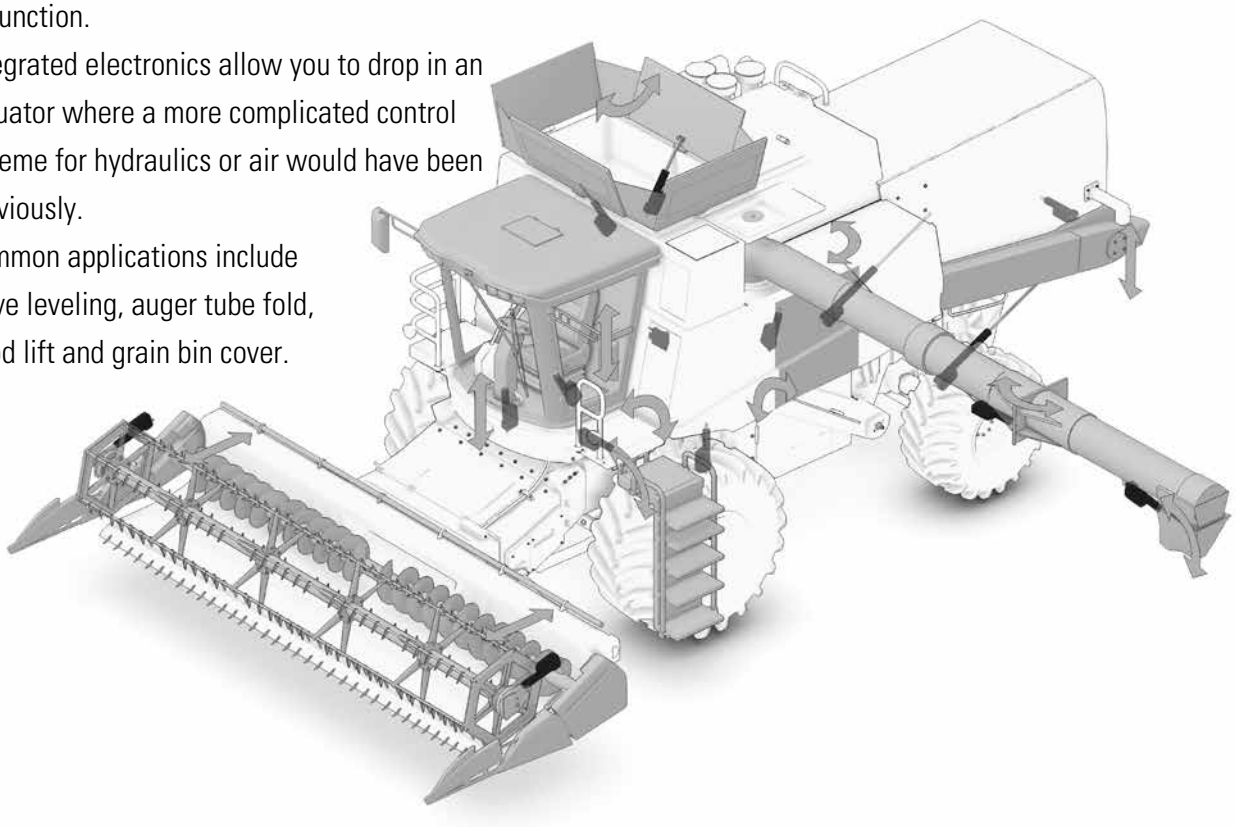

Trains, Trams, Buses and other Public Transportation

- Electric actuators are more environmentally friendly and cost effective than hydraulic and pneumatic systems.
- Trains and buses using actuators for pantographs benefit from the robust construction to achieve long life in harsh environments.
- Overload sense and confirmed position are vital to user safety.
- Other public transport applications include door actuation, step leveling and gap control.

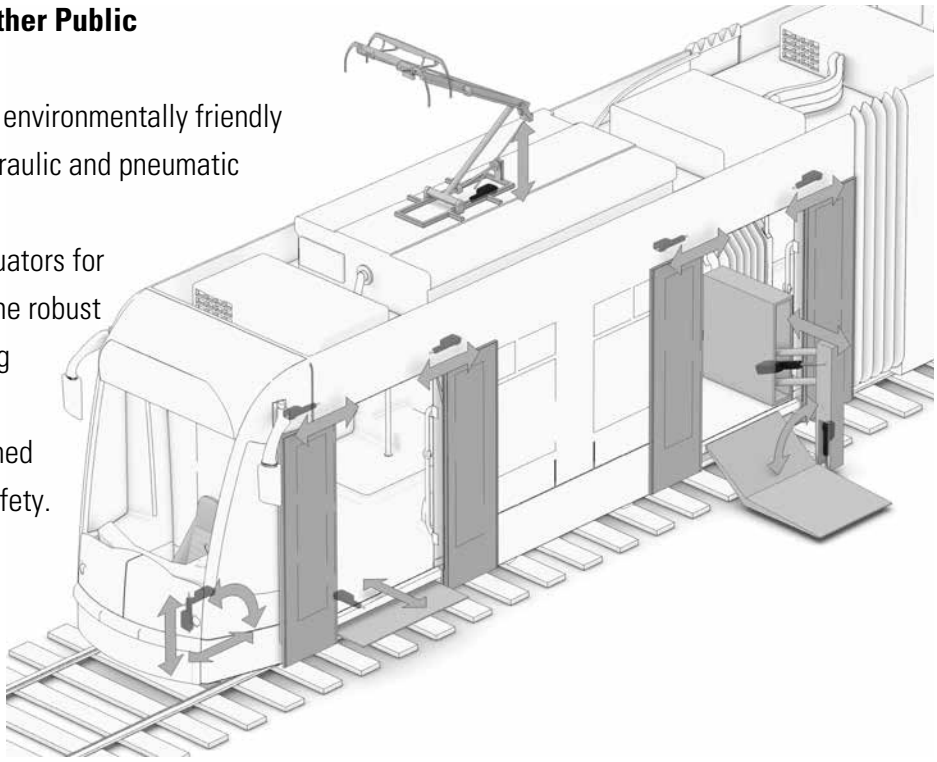

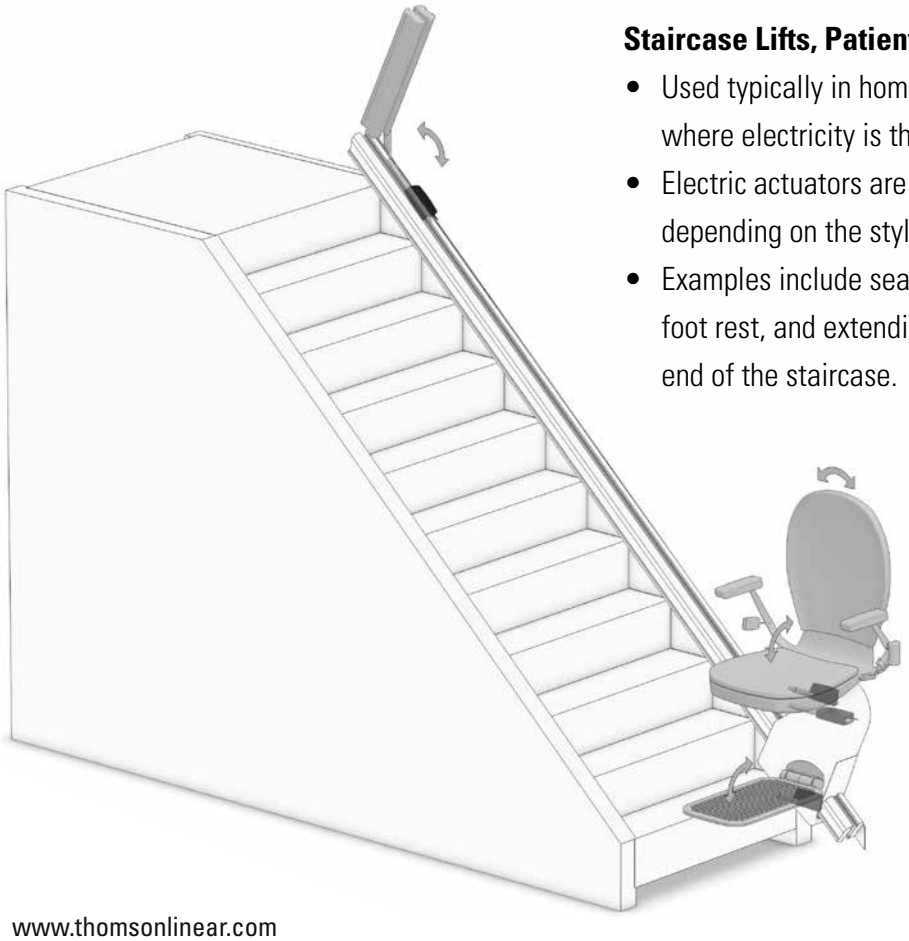

Staircase Lifts, Patient Lifts and Wheel Chairs

- Used typically in homes, offices, mobile equipment or where electricity is the only available power source.
- Electric actuators are ideal for many lift functions depending on the style and configuration.
- Examples include seat leveling, tilting of the seat and foot rest, and extending and retracting the rail at the end of the staircase.



Online Sizing and Selection Tools

Thomson LinearMotioneering for linear actuators is a self-service, online sizing and selection tool that saves you time and cost, and helps avoid misapplication. The tool allows you to quickly and accurately find your ideal solution by completing a self-guided, interactive series of questions that taps into the extensive application engineering knowledge base of Thomson experts.

LinearMotioneering is an easy-to-use, step-by-step tool that gathers all necessary information and then presents you with suitable solutions. Once the best candidate among the options is defined, LinearMotioneering allows you to download all of the technical data and a 3D CAD model of the selected actuator, shows you the cost and delivery time, and even lets you purchase it from the Thomson online store.

Your Own Project Library

All of your projects are stored in your own library so that you can return and continue working on them or use an old project as the basis for a new one. Since projects are stored online, you can open them from any computer, mobile phone or tablet – from anywhere in the world

Help with Custom Solutions

If LinearMotioneering can't find a suitable actuator for your project, you have the option to ask for a custom solution. The tool will ask for the necessary data so that our engineers can have a look and help you get what you need.

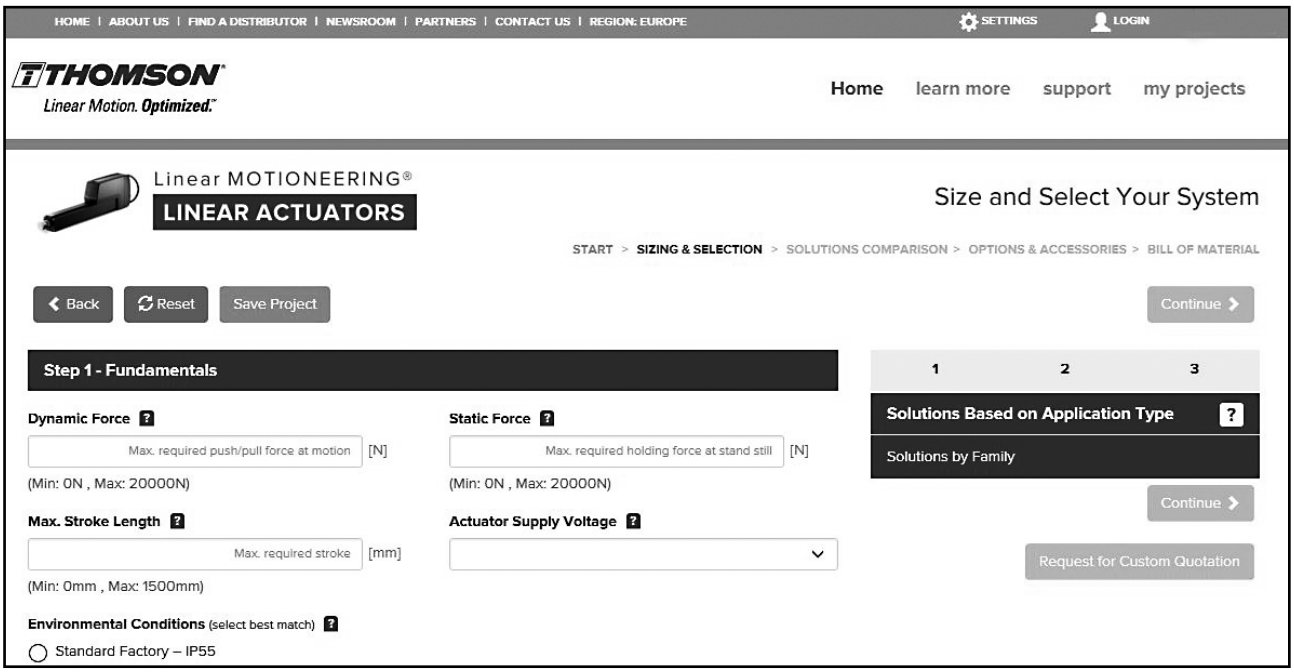

Do you want help to size and select the best match for your application?
Please visit: www.linearactuators.linearmotioneering.com

Thomson offers a wide variety of online resources to help you learn more about electric linear actuators. An experienced team of application engineers is also available to help you. To explore additional technical resources and options, contact Thomson customer support at www.thomsonlinear.com/contact.

Smart Actuators Product Website

Learn more about smart actuators and how they can help you build better machines at: www.thomsonlinear.com/smart

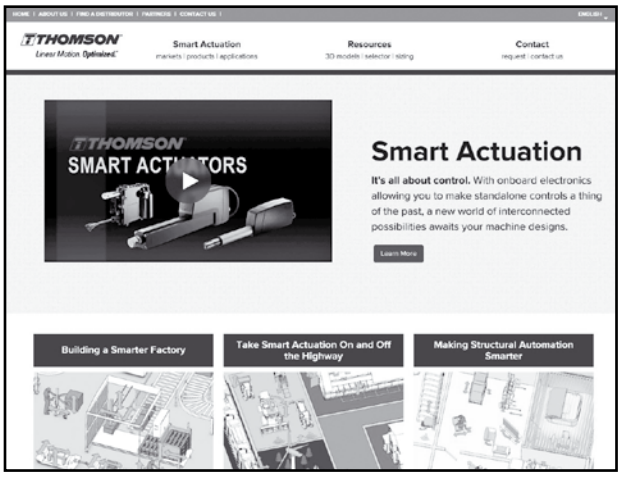

Free CAD Models

Download free interactive 3D models in the most common CAD formats. www.thomsonlinear.com/en/products/linear-actuators-drawings

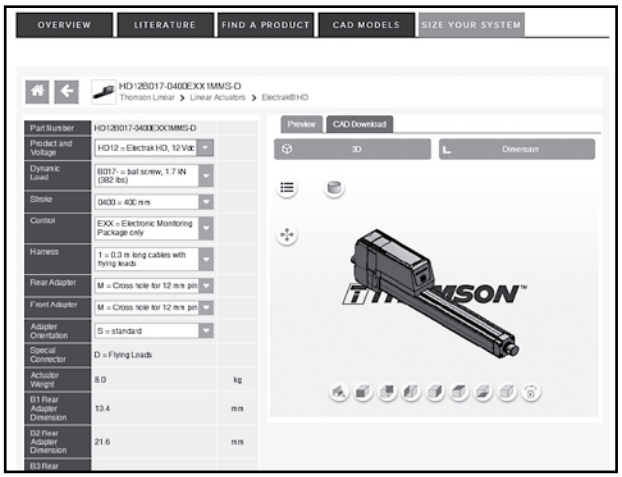

Electrak HD Product Website

Get additional information and learn more about Electrak HD at: www.thomsonlinear.com/hd

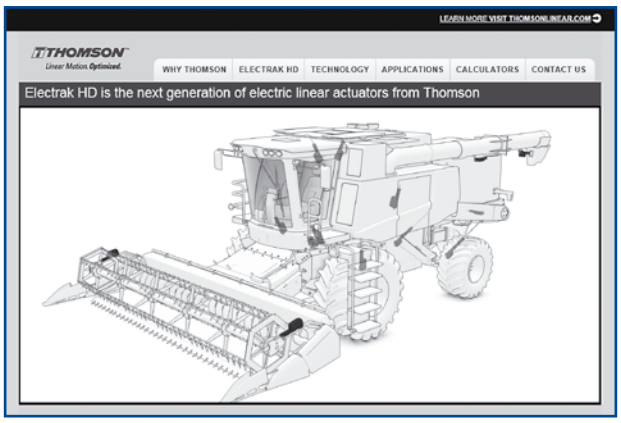

Off-road Vehicles on the web

Learn more about electric linear actuator applications in off-road vehicles at: www.thomsonlinear.com/moh

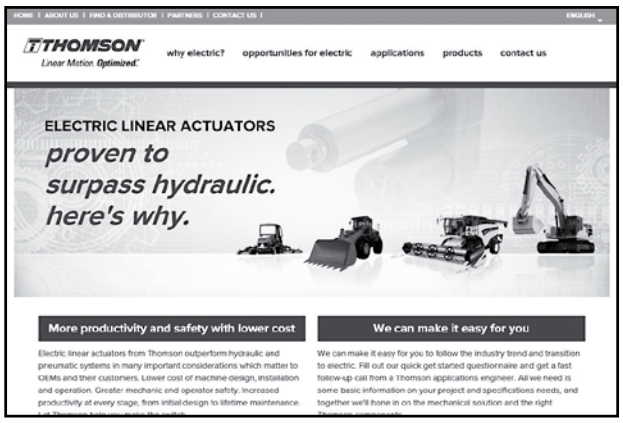

Performance Overview

Specifications

		Electrak 10	Electrak LA14	
				
Screw type		acme or ball	acme or ball	
Manual operation		no	optional	
Static load holding		yes	yes	
End-of-stroke protection		clutch	clutch	
Overload protection		yes	yes	
Available input voltages	[Vdc] [Vac]	12, 24 -	12, 24, 36 -	
Max. static load [1]	[N (lbf)]	13300 (3000)	18000 (4000)	
Max. dynamic load (Fx)	[N (lbf)]	6800 (1500)	6800 (1500)	
Max. speed @ no load / max. load	[mm/s (in/s)]	61/37 (2.40/1.40)	61/37 (2.40/1.40)	
Max. ordering stroke (S) length	[mm] / [in]	- / 24	600 / -	
Restraining torque	[Nm (lbf-in)]	11.3 (100)	0	
Operating temperature limits	[°C (F)]	- 25 – 65 (- 15 – 150)	- 25 – 65 (- 15 – 150)	
Full load duty cycle @ 25 °C (77 °F)	[%]	25	25	
Ingress protection rating - static		IP66	IP65	
Control options		• analog position feedback	• analog position feedback	
Page		18	26	

Do you want help to size and select the best match for your application?
LinearMotioneering will guide you through the whole process!
www.linearactuators.linearmotioneering.com

	Electrak 050	Electrak Throttle	M-Track 1
		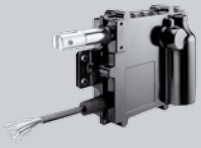	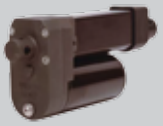
	worm	worm	trapezoidal
	no	no	no
	yes	yes	yes
	clutch	current sensing	internal limit switches
	yes	yes	yes
	12, 24, 36 -	12, 24 -	12, 24
	1020 (224)	260 (60)	1350 (300)
	510 (112)	130 (30)	734 (165)
	48 / 37 (1.9 /1.5)	196/83 (3.7/3.3)	Max. load 45 (1.75)
	200 / -	- / 2	300 / 12
	0	0	N/A
	-30 – 80 (-22 – 176)	- 40 – 125 (- 40 – 257)	-26~65 (-20~150)
	25	50	25
	IP56	IP69K, IP67	IP69K
	• internal end-of-stroke limit switches • analog position feedback	• analog position feedback • internal end-of-stroke limit switches • CAN bus J1939	• Potentiometer
	34	40	48

Do you want help to size and select the best match for your application?
LinearMotioneering will guide you through the whole process!
www.linearactuators.linearmotioneering.com

Electrak 10 – Technical Features



Standard Features

- Tough, strong and reliable
- 12, 24 Vdc as standard input voltages
- acme and ball screw models
- Static load up to 13.3 kN (3000 lbf)
- Dynamic load up to 6.8 kN (1500 lbf)
- Stroke up to 24 in
- Speed up to 61 mm/s (2.4 in/s)
- Protection class static IP66
- Overload clutch for mid and end of stroke protection
- Motor with thermal switch
- Maintenance free

General Specifications

Screw type	acme or ball
Nut type Dxxx-xxA (acme screw) Dxxx-xxB (ball screw)	 self locking lead nut ball nut
Manual override	no
Anti-rotation	no
Static load holding brake acme screw models ball screw models	 no (self-locking) yes
Safety features	overload clutch motor auto reset thermal switch
Electrical connections	flying leads with connector
Compliances Standard Optional	 – CE (1)

(1) Actuators used in the EU must be in compliance with CE

Electrak 10 – Technical Specifications

Mechanical Specifications

Max. static load [1]	[N (lbf)]	
Dxx-xxA (acme screw)		4450 (1000)
Dxx-xxB (ball screw)		13350 (3000)
Max. dynamic load (Fx)	[N (lbf)]	
Dxxx-05A5		1100 (250)
Dxxx-10A5		2250 (500)
Dxxx-20A5		2250 (500)
Dxxx-05B5		2250 (500)
Dxxx-10B5		4500 (1000)
Dxxx-20B5		4500 (1000)
Dxxx-21B5		6800 (1500)
Speed @ no load/max. load	[mm/s (in/s)]	
Dxxx-05A5		54/32 (2.10/1.20)
Dxxx-10A5		30/18 (1.20/0.70)
Dxxx-20A5		15/12 (0.67/0.45)
Dxxx-05B5		61/37 (2.40/1.40)
Dxxx-10B5		30/19 (1.30/0.80)
Dxxx-20B5		15/12 (0.60/0.45)
Dxxx-21B5		15/11 (0.60/0.43)
Min. ordering stroke (S) length	[in]	2
Max. ordering stroke (S) length	[in]	24
Ordering stroke length increments	[in]	2
Operating temperature limits	[°C (F)]	- 25 – 65 (- 15 – 150)
Full load duty cycle @ 25 °C (77 °F)	[%]	25
End play, maximum	[mm (in)]	
Dxx-xxA (acme screw)		2.0 (0.08)
Dxx-xxB (ball screw)		1.0 (0.04)
Restraining torque	[Nm (lbf-in)]	
Dxx-xxA (acme screw)		7.4 (65)
Dxx-xxB (ball screw)		11.3 (100)
Protection class		IP66

(1) Max. static load at fully retracted stroke

Electrical Specifications

Available input voltages	[Vdc]	12, 24
Input voltage tolerance	[%]	± 10
Current draw @ no load/max. load	[A]	
D12x-05A5		12.0/33.0
D12x-10A5		8.0/27.0
D12x-20A5		3.0/15.0
D12x-05B5		8.0/28.0
D12x-10B5		5.0/27.0
D12x-20B5		3.0/13.0
D12x-21B5		3.0/20.0
D24x-05A5		6.0/16.5
D24x-10A5		4.0/13.5
D24x-20A5		1.5/7.5
D24x-05B5		4.0/14.0
D24x-10B5		2.5/13.5
D24x-20B5		1.5/7.5
D24x-21B5		1.5/10.0
Flying leads length	[mm (in)]	165 (6.5)
Flying leads diameter	[mm (in)]	3 (0.12)
Flying leads cross section	[mm^2 (AWG)]	2 (14)

Electrak 10 – Dimensions

Dimensions	Projection
mm [inch]	

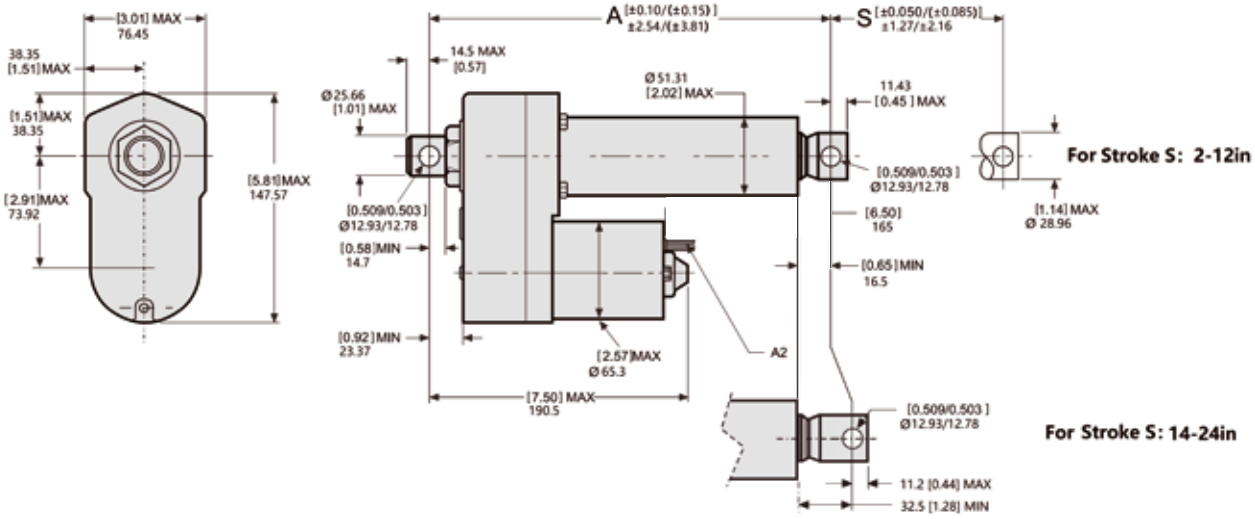

S: stroke, tolerance acme / ball screw
A: retracted length, tolerance acme / ball screw
A2: red lead

Stroke, Retracted Length and Weight Relationships

Ordering stroke (S)	[in]	2	4	6	8	10	12	14	16	18	20	22	24
Retracted length, acme screw models (A)	[mm]	211.3	262.1	312.9	363.7	414.5	465.3	594.4	645.2	696.0	746.8	797.6	848.4
	[in]	8.32	10.32	12.32	14.32	16.32	18.32	23.40	25.40	27.40	29.40	31.40	33.40
Retracted length, ball screw models (A)	[mm]	251.5	302.3	353.1	403.9	454.7	505.5	633.7	684.5	735.3	786.1	836.9	887.7
	[in]	9.90	11.90	13.90	15.90	17.90	19.90	24.95	26.95	28.95	30.95	32.95	34.95
Weight, acme screw models	[kg]	4.4	4.5	4.7	4.9	5.0	5.2	5.5	5.6	5.8	5.9	6.1	6.2
	[lbf]	9.7	10.0	10.4	10.7	11.1	11.4	12.1	12.3	12.8	13.0	13.4	13.6
Weight, ball screw models	[kg]	5.0	5.1	5.3	5.4	5.6	5.8	6.1	6.2	6.4	6.5	6.7	6.9
	[lbf]	11.0	11.3	11.7	12.0	12.4	12.7	13.4	13.6	14.1	14.3	14.7	15.2

Electrak 10 – Performance Diagrams

Load vs. Speed

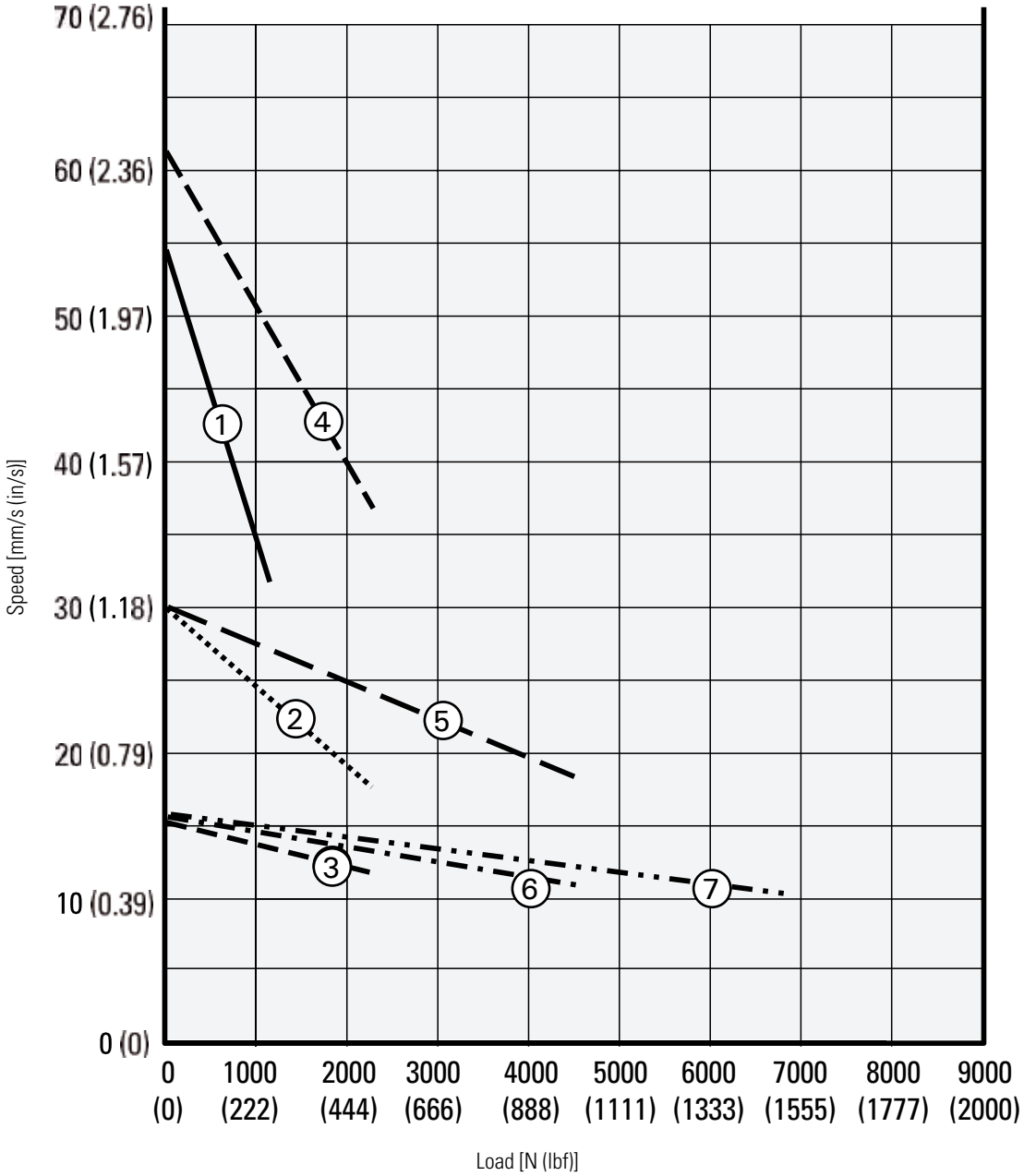

1. Dxxx-05A5 (1100 N (250 lbf))
2. Dxxx-10A5 (2250 N (500 lbf))
3. Dxxx-20A5 (2250 N (500 lbf))
4. Dxxx-05B5 (2250 N (500 lbf))
5. Dxxx-10B5 (4500 N (1000 lbf))
6. Dxxx-20B5 (4500 N (1000 lbf))
7. Dxxx-21B5 (6800 N (1500 lbf))

Electrak 10 – Performance Diagrams

Load vs. Current for 12 and 24 Vdc actuators

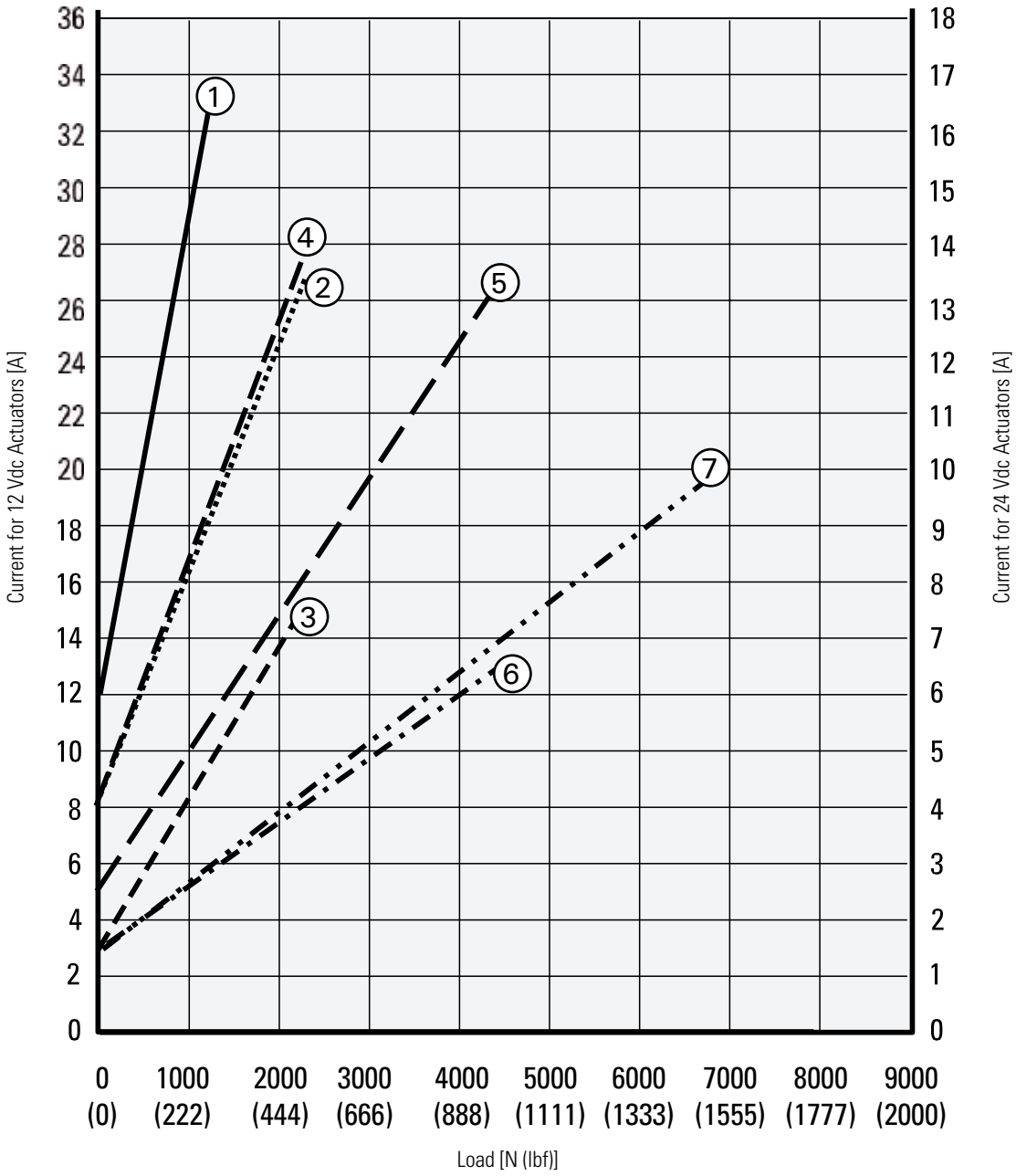

1. Dxxx-05A5 (1100 N (250 lbf))
2. Dxxx-10A5 (2250 N (500 lbf))
3. Dxxx-20A5 (2250 N (500 lbf))
4. Dxxx-05B5 (2250 N (500 lbf))
5. Dxxx-10B5 (4500 N (1000 lbf))
6. Dxxx-20B5 (4500 N (1000 lbf))
7. Dxxx-21B5 (6800 N (1500 lbf))

Electrak 10 – Ordering Key

Ordering Key

1	2	3	4	5	6
D12-	**05A5-**	**02**	**M3**	**M0**	**CE**

1. Model and input voltage
D12 = Electrak 10, 12 Vdc
D24 = Electrak 10, 24 Vdc

2. Dynamic load capacity, screw type and maximum speed
05A5 - = 1100 N, acme, 54 mm/s
10A5 - = 2250 N, acme, 30 mm/s
20A5 - = 2250 N, acme, 15 mm/s
05B5 - = 2250 N, ball, 61 mm/s
10B5 - = 4500 N, ball, 30 mm/s
20B5 - = 4500 N, ball, 15 mm/s
21B5 - = 6800 N, ball, 15 mm/s
2KB5 - = 9000N, ball, 9mm/s (1)

3. Ordering stroke length (S)
02 = 2 inch (50.8 mm)
04 = 4 inch (101.6 mm)
06 = 6 inch (152.4 mm)
08 = 8 inch (203.2 mm)
10 = 10 inch (254.0 mm)
12 = 12 inch (304.8 mm)
14 = 14 inch (355.6 mm)
16 = 16 inch (406.4 mm)
18 = 18 inch (457.2 mm)
20 = 20 inch (508.0 mm)
22 = 22 inch (558.8 mm)
24 = 24 inch (609.6 mm)

4. Rear adapter hole orientation
M0 = adapter at 0° (standard)
M3 = adapter at 90°

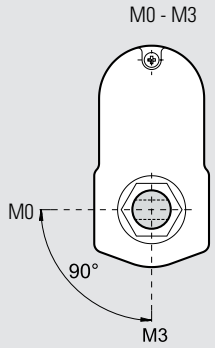

5. Connector option
blank = no connector (flying leads)

6. CE certification
Blank = no CE certification
CE = CE certified

Example: D12-05A5-02
D24-20B5-16M3BCE

(1) 2KB5 is not applicable for strokes of more than 12 inches.

Electrak 10 – Electrical Connections

Standard

Actuator supply voltage [Vdc]	
D12-	12
D24-	24

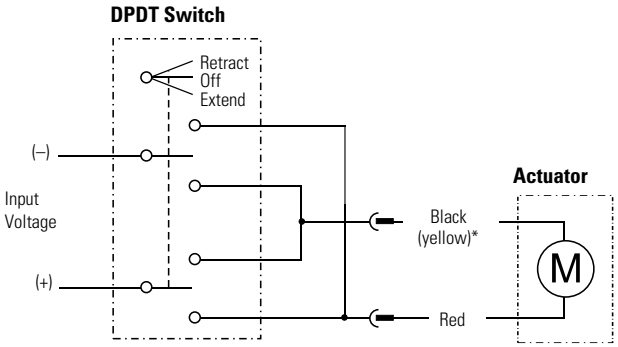

* Lead can be black or yellow

Connect the red lead to positive and black (yellow)* to negative to extend the actuator. Change polarity to retract the actuator.

Electrak LA14 – Technical Features



Standard Features

- Robust and reliable
- 12, 24, 36Vdc as standard input voltages
- Acme and ball screw models
- Static load up to 18 kN (4000 lbf)
- Dynamic load up to 6.8 kN (1500 lbf)
- Stroke up to 24 in
- Speed up to 61 mm/s (2.4 in/s)
- Protection class static IP65
- Overload clutch for mid and end of stroke protection
- Motor with thermal switch
- Corrosion free aluminium cover tube
- Anti-rotation mechanism
- T-slots in the cover tube for magnetic sensors
- Trunnion mounting possible
- Maintenance free

General Specifications

Screw type	acme or ball
Nut type Dxx-xxA (acme screw) Dxx-xxB (ball screw)	 self locking lead nut ball nut
Manual override	No (optional)
Anti-rotation	no
Static load holding brake acme screw models ball screw models	 no (self-locking) yes
Safety features	overload clutch motor auto reset thermal switch
Electrical connections no potentiometer option with potentiometer option	 flying leads with or without connector cable with or without connector
Compliances	CE

Optional Mechanical Features

- Variety of front and rear adapters
- Different rear adapter orientations
- Manual override

Optional Electrical Features

- Potentiometer feedback

Accessories

- External slot-mounted limit switches
- Mounting pin kits
- Mounting pin bracket kits
- Trunnions mounting kits

Compatible Controls

Contact customer support at www.thomsonlinear.com/cs

Electrak LA14 – Technical Specifications

Mechanical Specifications

Max. static load [1]	[N (lbf)]	
DAxx-xxA (acme screw)		11350 (2500)
DAxx-xxB (ball screw)		18000 (4000)
Max. dynamic load (Fx)	[N (lbf)]	
DAxx-05A65M		1100 (250)
DAxx-10A65M		2250 (500)
DAxx-20A65M		2250 (500)
DAxx-05B65M		2250 (500)
DAxx-10B65M		4500 (1000)
DAxx-20B65M		4500 (1000)
DAxx-21B65M		6800 (1500)
Speed @ no load/max. load	[mm/s (in/s)]	
DAxx-05A65M		54/32 (2.10/1.20)
DAxx-10A65M		30/18 (1.20/0.70)
DAxx-20A65M		15/12 (0.67/0.45)
DAxx-05B65M		61/37 (2.40/1.40)
DAxx-10B65M		30/19 (1.30/0.80)
DAxx-20B65M		15/12 0.60/0.45)
DAxx-21B65M		15/11 (0.60/043)
Min. ordering stroke (S) length	[mm]	50
Max. ordering stroke (S) length [2]	[mm]	600
Ordering stroke length increments	[mm]	50
Operating temperature limits	[°C (F)]	- 25 – 85 (- 15 – 185)
Full load duty cycle @ 25 °C (77 °F)	[%]	25
End play, maximum	[mm (in)]	1.0 (0.04)
Restraining torque	[Nm (lbf-in)]	0
Protection class - static		IP65
Salt spray resistance	[h]	96

(1) Max. static load at fully retracted stroke

Electrical Specifications

Available input voltages [1]	[Vdc]	12, 24, 36
Input voltage tolerance	[%]	± 10
Current draw @ no load/max. load [2]	[A]	
DA12-05A65M		12.0/34.0
DA12-10A65M		9.0/27.0
DA12-20A65M		8.0/15.0
DA12-05B65M		8.0/26.0
DA12-10B65M		5.0/26.0
DA12-20B65M		4.0/14.0
DA12-21B65M		4.0/19.0
DA24-05A65M		6.0/17.0
DA24-10A65M		4.5/13.5
DA24-20A65M		4.0/7.5
DA24-05B65M		4.0/13.0
DA24-10B65M		2.5/13.0
DA24-20B65M		2.0/7.0
DA24-21B65M		2.0/9.5
Flying leads length	[mm (in)]	165 (7.5)
Flying leads diameter	[mm (in)]	3 (0.12)
Flying leads cross section	[mm^2 (AWG)]	2 (14)
Cable length with option pot.	[mm (in)]	600 (24)
Cable diameter with option pot.	[mm (in)]	9 (0.35)
Cable leads cross section with option potentiometer	[mm^2 (AWG)]	
motor leads		2.5 (14)
potentiometer lead		1.5 (16)

(1) For other input voltages - contact customer support.
(2) For current draw for 36 Vdc input voltage models - contact customer support.

Electrak LA14 – Dimensions

Dimensions	Projection
mm [inch]	

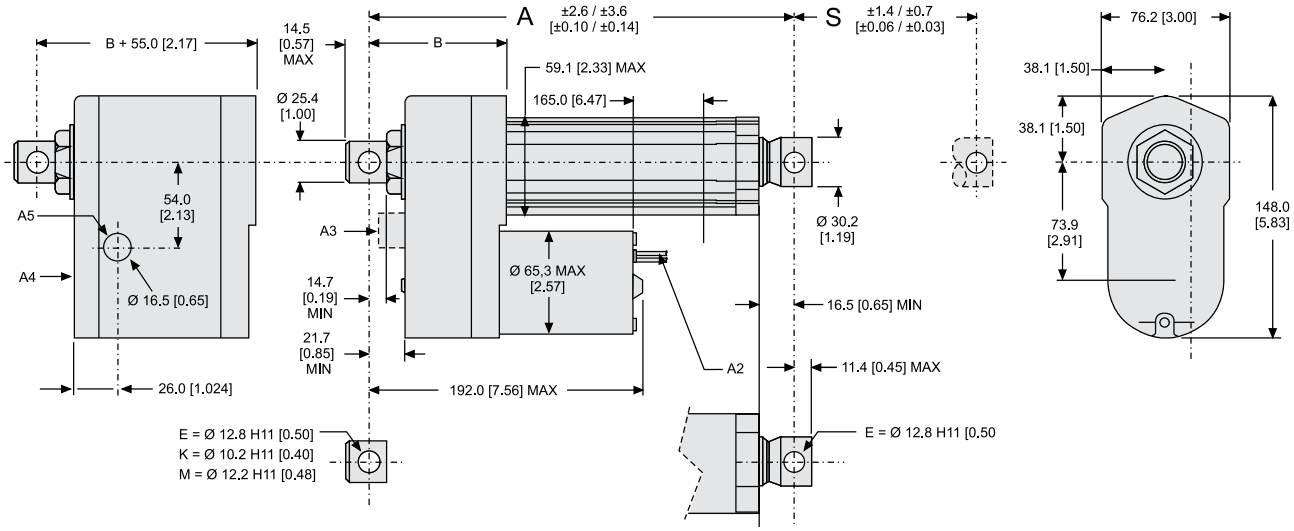

S: stroke, tolerance acme / ball screw
A: retracted length, tolerance acme / ball screw
A2: red lead
A3: manual override (optional)
A4: housing dimensions for potentiometer option
A5: cable output when option potentiometer
B: 86.1 mm (3.390 inch)

Stroke, Retracted Length and Weight Relationships

Ordering stroke (S)	[mm]	50	100	150	200	250	300	350	400	450	500	550	600
Retracted length, acme screw models (A)	[mm]	219.9	269.9	319.9	369.9	419.9	469.9	586.6	636.6	686.6	736.6	786.6	836.6
	[in]	8.53	10.50	12.47	14.44	16.41	18.37	22.31	24.28	26.25	28.22	30.19	32.15
Retracted length, ball screw models (A)	[mm]	269.6	319.6	369.6	419.6	469.6	519.6	623.4	673.4	723.5	773.4	823.4	873.4
	[in]	10.61	12.58	14.55	16.52	18.49	20.46	24.39	26.36	28.33	30.30	32.27	34.24
Add on length for option potentiometer	[mm]	55.0											
	[in]	2.17											
Weight, acme screw models	[kg]	4.5	4.7	4.9	5.1	5.3	5.5	5.8	6.0	6.2	6.4	6.6	6.8
	[lbf]	9.9	10.3	10.8	11.2	11.7	12.1	12.8	13.2	13.6	14.1	14.5	15.0
Weight, ball screw models	[kg]	5.3	5.5	5.7	5.9	6.1	6.3	6.6	6.8	7.0	7.2	7.4	7.6
	[lbf]	11.7	12.1	12.5	13.0	13.4	13.9	14.5	15.0	15.4	15.8	16.3	16.7
Add on weight for option potentiometer	[kg]	1.30											
	[lbf]	3.31											

Electrak LA14 – Performance Diagrams

Acme screw models
Speed & Current vs. Load

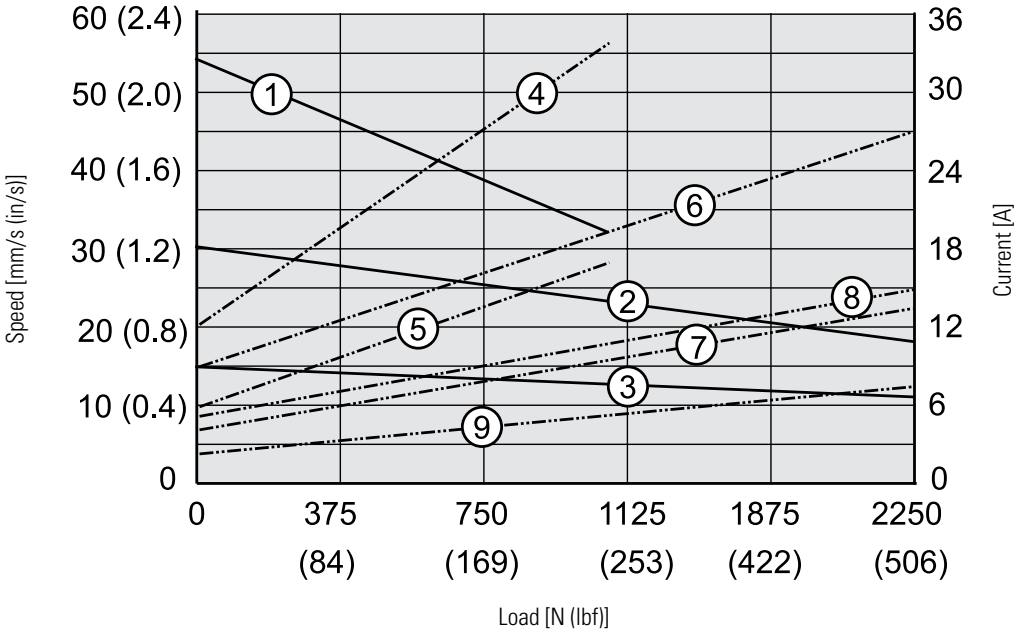

Speed
1: DAxx-05A65M
2: DAxx-10A65M
3: DAxx-20A65M

Current
4. DA12-05A65M
5: DA24-05A65M
6: DA12-10A65M
7: DA24-10A65M
8: DA12-20A65M
9: DA24-20A65M

Ball screw models
Speed & Current vs. Load

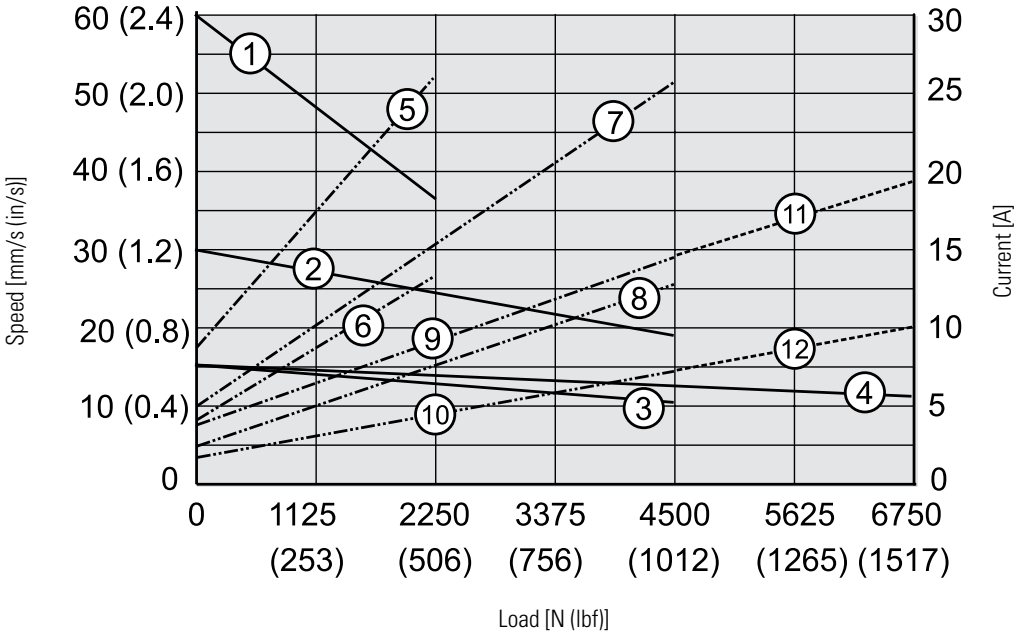

Speed
1: DAxx-05B65M
2: DAxx-10B65M
3: DAxx-20B65M
4: DAxx-21B65M

Current
5. DA12-05B65M
6: DA24-05B65M
7: DA12-10B65M
8: DA24-10B65M
9: DA12-20B65M
10: DA24-20B65M
11: DA12-21B65M
12: DA24-21B65M

Note: For current draw for 36 Vdc input voltage models - contact customer support.

Electrak LA14 – Ordering Key

Ordering Key

1	2	3	4	5	6	7	8
DA12-	**05A65M**	**100**	**M0**	**N-**	**-D**	**E**	**M**

1. Model and input voltage
DA12- = Electrak LA14, 12 Vdc
DA24- = Electrak LA14, 24 Vdc
DA36- = Electrak LA14, 36 Vdc

2. Dynamic load capacity, screw type and maximum speed
05A65M = 1100 N, acme screw, 54 mm/s
10A65M = 2250 N, acme screw, 30 mm/s
20A65M = 2250 N, acme screw, 15 mm/s
05B65M = 2250 N, ball screw, 61 mm/s
10B65M = 4500 N, ball screw, 30 mm/s
20B65M = 4500 N, ball screw, 15 mm/s
21B65M = 6800 N, ball screw, 15 mm/s

3. Ordering stroke length (S)
05 = 50 mm (1.97 in)
10 = 100 mm (3.94 in)
15 =150 mm (5.90 in)
20 = 200 mm (7.87 in)
25 = 250 mm (9.84 in)
30 = 300 mm (11.81 in)
35 = 350 mm (13.78 in)
40 = 400 mm (15.75 in)
45 = 450 mm (17.72 in)
50 = 500 mm (19.69 in)
55 = 550 mm (21.65 in)
60 = 600 mm 23.62 in)

4. Rear / front adapter hole position (1)
M0 = both adapters at 0° (standard position)
MF = both adapters at 90°

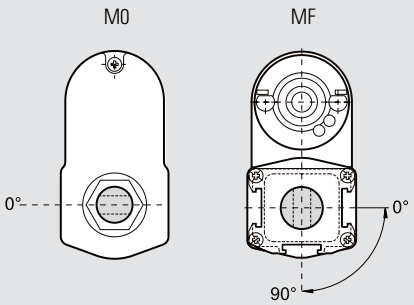

5. Options
N = no option
NPO = potentiometer feedback
NHW = manual override (1)

Dimensions for manual override option

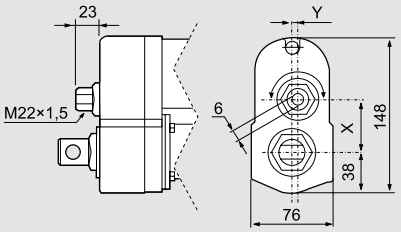

Model	X	Y
DAxx05A(B)65-	49.6	0.0
DAxx10A(B)65-	43.3	5.2
DAxx20(21)A(B)65-	38.9	0.0

6. Connector option
D = no connector (flying leads)

7. Front adapter option
E = cross hole for 0.5 inch pin

8. Rear adapter option
E = cross hole for 0.5 inch pin
K = cross hole for 10 mm pin
M = cross hole for 12 mm pin

(1) Only adapter position M0 possible with option manual override.

Electrak LA14 – Electrical Connections

Without Option

Actuator supply voltage	[Vdc]	
DA12		12
DA24		24
DA36		36

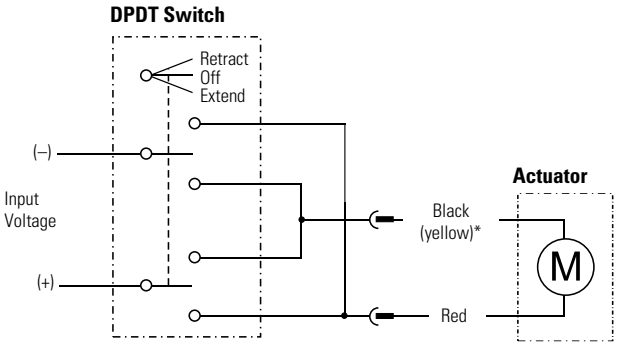

* Lead can be black or yellow

Connect the red lead to positive and black (yellow)* to negative to extend the actuator. Change polarity to retract the actuator.

Option Potentiometer

Actuator supply voltage	[Vdc]	
DA12		12
DA24		24
DA36		36
Potentiometer type		wire-wound
Potentiometer max. input voltage	[Vdc]	32
Potentiometer max. power	[W]	2
Potentiometer linearity	[%]	± 0.25
Potentiometer output resolution	[ohm/mm]	
50 - 255 mm stroke		39
256 - 510 mm stroke		20
511 - 600 mm stroke		10

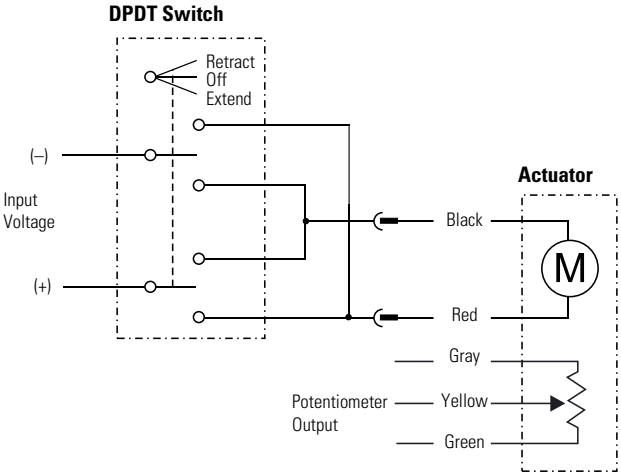

Connect the red lead to positive and black to negative to extend the actuator. Change polarity to retract the actuator. The potentiometer output cable has 0 ohm between gray and yellow leads when the actuator is fully extended.

Electrak LA14 – Accessories

Mounting Pin Kits

Designation	A [mm (in)]	Part Number
Mounting pins (pair)	12 (0.47)	D603 023

The mounting pins are used in the rear and front adapter holes of the actuator. The pins have a groove in each end so that it can be secured with snap rings.

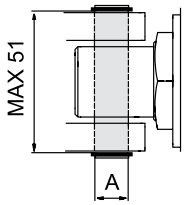

Dimensions
mm

Magnetic Sensor

Designation	Contact Type	Part Number
Magnetic sensor	normally open	D535 070
Magnetic sensor	normally closed	D535 071
Magnetic sensor	changing	D535 073

Specifications

Parameter		D535 070 D535 071	D535 073
Maximum power	[W]	10	10
Maximum voltage	[Vdc]	100	100
Maximum current	[A]	0,5	0,5
Maximum contact resistance	[ohm]	20	20
Lead cross section	[mm²]	2 × 0,14	3 × 0,14
Cable length	[mm]	3000	3000
Protection class		IP67	IP67

The magnetic sensor fits in to the T-slot running along three sides of the cover tube. The cable is moulded into the sensor.

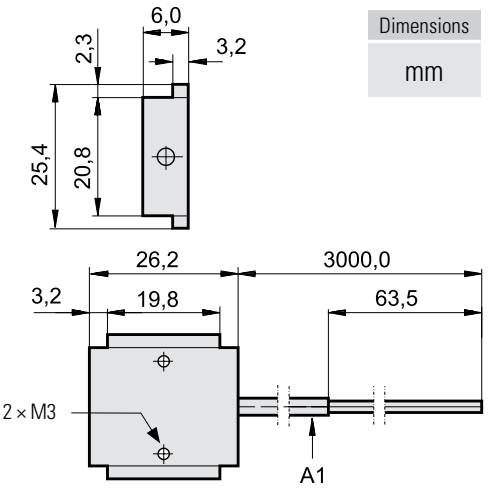

Dimensions
mm

A1: cable

Electrak LA14 – Accessories

Mounting Pin Bracket Kits

Designation	Part Number
Mounting pin brackets (pair)	D603 029

The mounting pins are used in the rear and front adapter holes of the actuator. The pins have a groove in each end so that it can be secured with snap rings.

Dimensions
mm

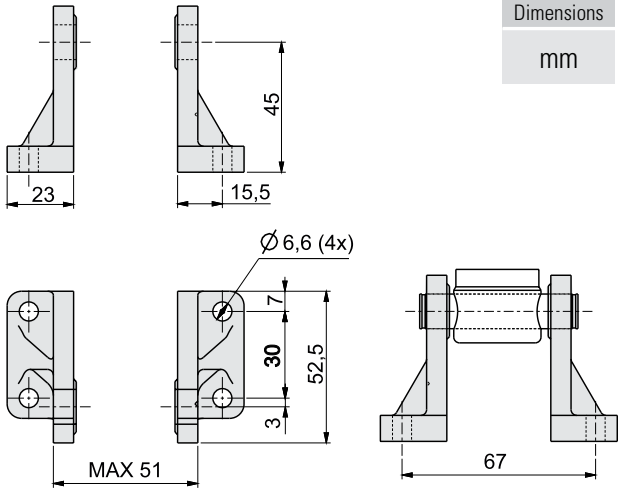

Trunnion Mounting Kits

Designation	Part Number
Trunnions (pair)	D603 022
Trunnion brackets (pair)	D603 030

The trunnions can be mounted to the T-slot running along the right and left side of the cover tube.

Trunnions

Dimensions
mm

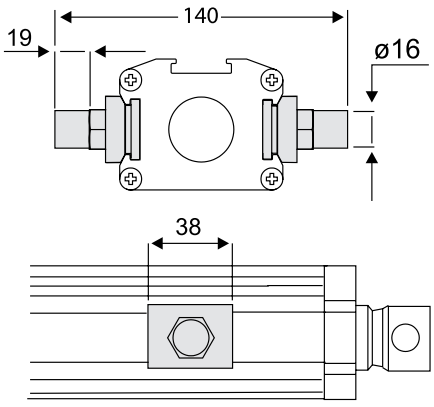

Trunnion Brackets

Dimensions
mm

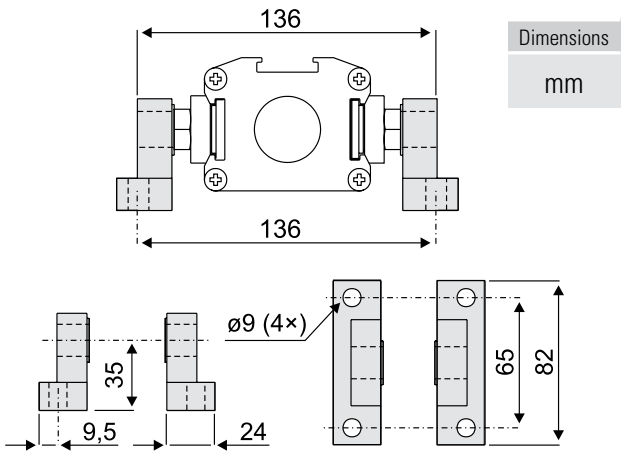

Electrak 050 – Technical Features



Standard Features

- Designed for office or medical applications
- Small, quiet and lightweight
- Short retracted length
- Low cost
- Durable and corrosion free plastic housing
- Color molded into the plastic, no painting required
- Maintenance free
- Internally restrained extension tube
- Estimated life is minimum 40000 cycles

General Specifications

Screw type	worm
Nut type	lead
Manual override	no
Anti-rotation	yes
Static load holding brake	no (self-locking)
Safety features	internal limit switches overload clutch auto reset thermal switch
Electrical connections	cable with flying leads or connector
Compliances	CE

Optional Mechanical Features

Cross hole orientation

Optional Electrical Features

End of stroke limit switches with dynamic braking

Potentiometer feedback

Electrak 050 – Technical Features

Mechanical Specifications

Max. static load [1] DExx17W41 DExx17W42 DExx17W44	[N (lbf)]	 1020 (224) 550 (120) 280 (60)
Max. dynamic load (Fx) DExx17W41 DExx17W42 DExx17W44	[N (lbf)]	 510 (112) 275 (60) 140 (30)
Speed @ no load/max. load	[mm/s (in/s)]	12/9 (0.5 /0.35) 24/18 (0.9/0.7) 48/37 (1.9/1.5)
Min. ordering stroke (S) length	[mm]	25
Max. ordering stroke (S) length	[mm]	200
Ordering stroke length increments	[in]	25
Operating temperature limits	[°C (F)]	-30 – 80 (-22 – 176)
Full load duty cycle @ 20 °C (70 °F)	[%]	25
End play, maximum	[mm (in)]	1.5 (0.06)
Restraining torque	[Nm (lbf-in)]	0
Protection class - static		IP56
Salt spray resistance	[h]	96

Electrical Specifications

Available input voltages	[Vdc]	12, 24, 36
Input voltage tolerance	[%]	± 10
Current draw @ no load/max. load [1] DE12-17W41 DE12-17W42 DE12-17W44 DE24-17W41 DE24-17W42 DE24-17W44	[A]	 1.4/3.8 0.7/1.9 1.2/3.8 0.6/1.8 1.4/3.8 0.7/1.9
Cable lengths, standard [2]	[mm (in)]	150 (6.0)
Cable diameter	[mm (in)]	13 (0.5)
Cable leads cross section	[mm^2 (AWG)]	1 (18)

(1) For current draw for 36 Vdc input voltage models - contact customer support.
(2) The same cable is used both for the input voltage and the feedback signals.

Electrak 050 – Dimensions

Dimensions	Projection
mm [inch]	

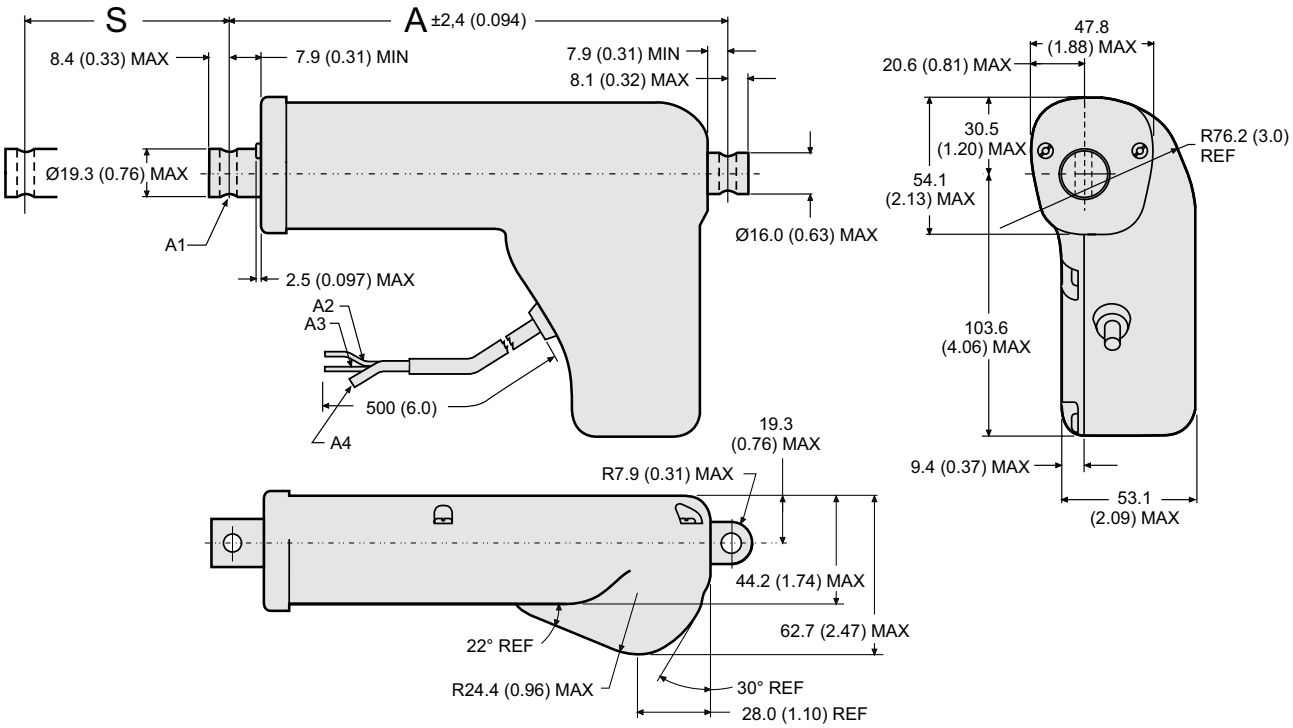

Note: see 3D models for all available adapter options.

S: stroke (tolerances: 17W41 = ± 3.23 mm (0.127 in), 17W42 = ± 4.25 mm (0.167 in), 17W44 = ± 5.26 mm (0.207 in))
A: retracted length
A1: Shown are Ø 6 mm +0.15/ -0 (0.236 in +0.006/ -0) mounting cross holes (2 ×) in standard position.
A2: red lead
A3: yellow lead
A4: vent tube Ø 3 mm (0.188 in)

Stroke, Retracted Length and Weight Relationships

Ordering stroke (S)	[in]	1	2	3	4	5	6	7	8
Retracted length (A)	[mm]	114.2	139.2	164.2	189.2	214.2	239.2	264.2	289.2
	[in]	4.496	5.480	6.465	7.449	8.433	9.417	10.402	11.386
Add on length for option 0.25 inch fork front adapter	[mm]	16.3							
	[in]	0.64							
Add on length for option potentiometer	[mm]	31.5							*
	[in]	1.24							*
Weight	[kg]	0.59	0.64	0.69	0.73	0.78	0.82	0.87	0.91
	[lbf]	1.30	1.41	1.52	1.61	1.72	1.81	1.92	2.01
Add on weight for option potentiometer	[kg]	0.10							*
	[lbf]	0.22							*

* 8 inch stroke not possible with potentiometer (PO, MP, PF options)

Electrak 050 – Performance Diagrams

Speed and Current vs. Load

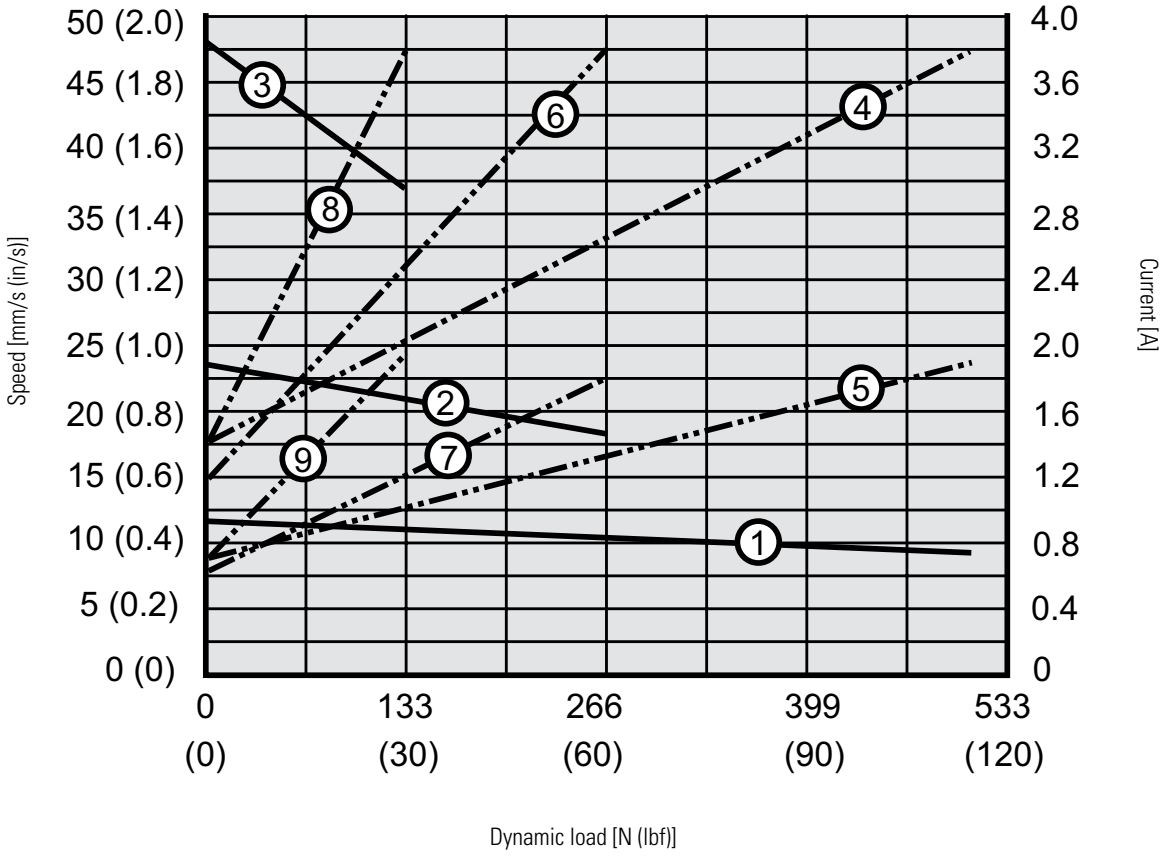

Speed
1: DExx-17W41 (510 N (112 lbf))
2: DExx-17W42 (275 N (60 lbf))
3: DExx-17W44 (140 N (30 lbf))

Current
4: DE12-17W41 (12 Vdc, 510 N (112 lbf))
5: DE24-17W41 (24 Vdc, 510 N (112 lbf))
6: DE12-17W42 (12 Vdc, 275 N (60 lbf))
7: DE24-17W42 (24 Vdc, 275 N (60 lbf))
8: DE12-17W44 (12 Vdc, 140 N (30 lbf))
9: DE24-17W44 (24 Vdc, 140 N (30 lbf))

Electrak 050 – Ordering Key

Ordering Key

1	2	3	4	5	6	7	8
DE12	**17W41-**	**02**	**NN**	**HH**	**N**	**C**	**A**

1. Model and input voltage
DE12 = Electrak 050, 12 Vdc
DE24 = Electrak 050, 24 Vdc
DE36 = Electrak 050, 36 Vdc

2. Dynamic load capacity
17W41 - = 510 N (112 lbf)
17W42 - = 275 N (60 lbf)
17W44 - = 140 N (30 lbf)

3. Ordering stroke length
01 = 1 inch (25.4 mm)
02 = 2 inch (50.8 mm)
03 = 3 inch (76.2 mm)
04 = 4 inch (101.6 mm)
05 = 5 inch (127.0 mm)
06 = 6 inch (152.4 mm)
07 = 7 inch (177.8 mm)
08 = 8 inch (203.2 mm)

4. Options
NN = no option
FN = end-off-stroke limits switches
NP = potentiometer (not possible with 8 inches stroke)
FP = end-off-stroke limits switches + potentiometer

5. Cross-hole orientation
HH = standard cross-hole orientation in both ends
MH = cross-hole rotated 90° in both ends

6. Color of housing
N- = black

7. Type of connector
C = Packard Electric Pack-Con
D = no connector (flying leads)

8. Front adapter
A = cross-hole 0.25 inch
B = fork 0.25 inch

Electrak 050 – Electrical Connections

Without Option

Actuator supply voltage DE12 DE24 DE36	[Vdc]	 12 24 36

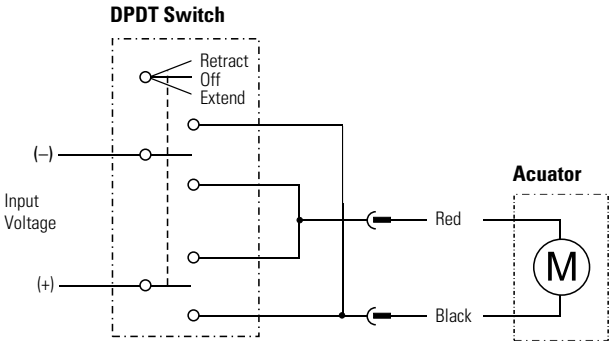

Connect the black lead to positive and red to negative to extend the actuator. Change polarity to retract the actuator.

Option Potentiometer

Actuator supply voltage DE12 DE24 DE36	[Vdc]	 12 24 36
Potentiometer type		wire-wound
Potentiometer max. input voltage	[Vdc]	32
Potentiometer max. power	[W]	2
Potentiometer linearity	[%]	± 0.25
Potentiometer output resolution DExx-17W41 DExx-17W42 DExx-17W44	[ohm/mm]	 22.0 21.9 21.2

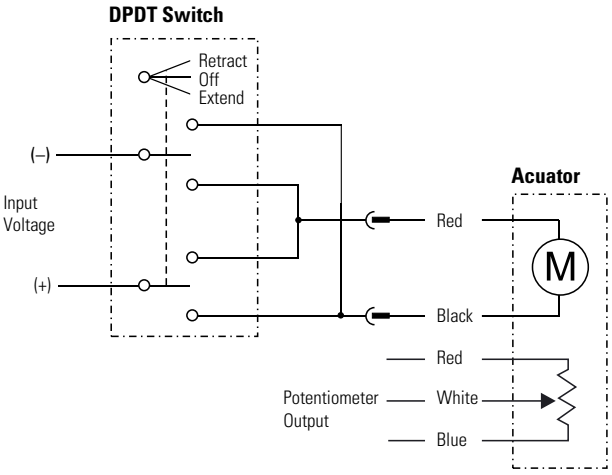

Connect the black lead to positive and red to negative to extend the actuator. Change polarity to retract the actuator. The potentiometer output has 0 ohm between white and red when the actuator is fully extended.

Electrak Throttle – Technical Features

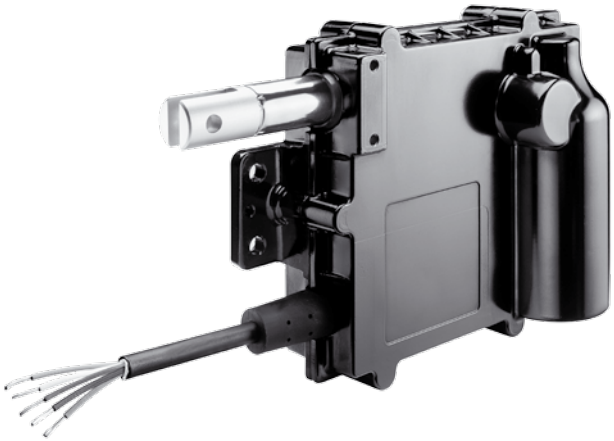

Standard Features

- Designed for industrial applications
- Rugged aluminium housing with IP69K/IP67 ingress protection
- E-coated housing for corrosion resistance
- Minimal maintenance
- Integrated electronic options
- High end features at a low cost
- Integrated mounting holes

General Specifications

Screw type	worm
Nut type	worm
Manual override	no
Anti-rotation	yes
Static load holding brake	no (self-locking)
Safety features	end-of-stroke overload protection mid stroke overload protection motor auto reset thermal switch (1)
Electrical connections	cable with flying leads or Deutsch connector
Compliances	CE

(1) no thermal switch on units with temperature rating E.

Optional Mechanical Features

Adapter orientation
Right angle cable exit
Extended operating temperature range

Optional Electrical Features

Analog position feedback
Internal end-of-stroke limit switches
SAE J1939 CAN bus

Compatible Controls

Contact customer support at www.thomsonlinear.com/cs

Electrak Throttle – Technical Specifications

Mechanical Specifications

Max. static load [1] ETxx-084 [2] ETxx-174	[N (lbf)]	 90 (20) 260 (60)
Max. dynamic load (Fx) ETxx-084 [2] ETxx-174	[N (lbf)]	 45 (10) 130 (30)
Speed @ no load/max. load ETxx-084 [2] ETxx-174	[mm/s (in/s)]	 96/83 (3.7/3.3) 48/37(1.9/1.45)
Ordering stroke (S) length	[mm(in)]	50.8 (2)
Retracted length	[mm(in)]	184.7 (7.27)
Operational life	[cycles]	500 0 00
Operating temperature limits ETxx-xxx-xS ETxx-xxx-xE	[°C (F)]	 - 40 – 85 (- 40 – 185) - 40 – 125 (- 40 – 257)
Full load duty cycle @ 25 °C (77 °F)	[%]	50
End play, maximum	[mm (in)]	1.5 (0.06)
Restraining torque	[Nm (lbf-in)]	0
Protection class - static		IP69K, IP65
Weight	[kg (lbf)]	1.11 (2.5)
Salt spray resistance	[h]	500

(1) Max. static load at fully retracted stroke.
(2) The ETxx-084 (high speed version) can only be ordered in combination with operating temperature rating E.

Electrical Specifications

Available input voltages	[Vdc]	12, 24
Input voltage tolerance	[%]	± 10
Current draw @ no load/max. load [1] ET12 (12 Vdc input voltage) ET24 (24 Vdc input voltage)	[A]	 1.5/4 0.75/2
Motor cable length	[m (in)]	165 (6.5)
Motor cable diameter	[mm (in)]	11.5 (0.45)
Motor cable leads cross section	[mm^2 (AWG)]	1 (18)

(1) Max. current draw ratings do not include motor inrush current. Typical inrush current values are 12 A at 12 VDC and 6 A at 24 VDC.

Electrak Throttle – Dimensions

Dimensions	Projection
mm [inch]	

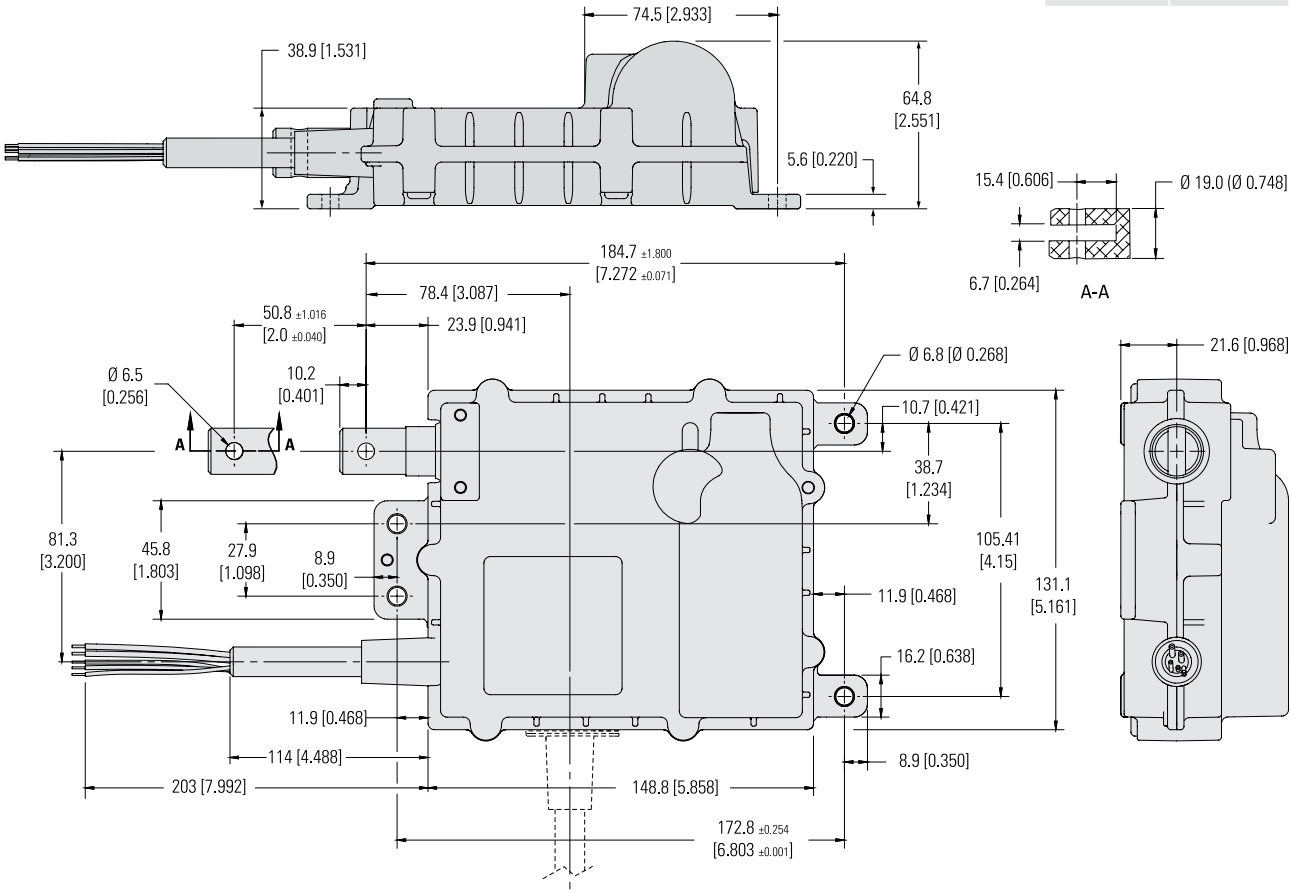

Electrak Throttle – Performance Diagrams

Speed and Current vs. Load

ETxx-084 (45 N (10 lbf), high speed)

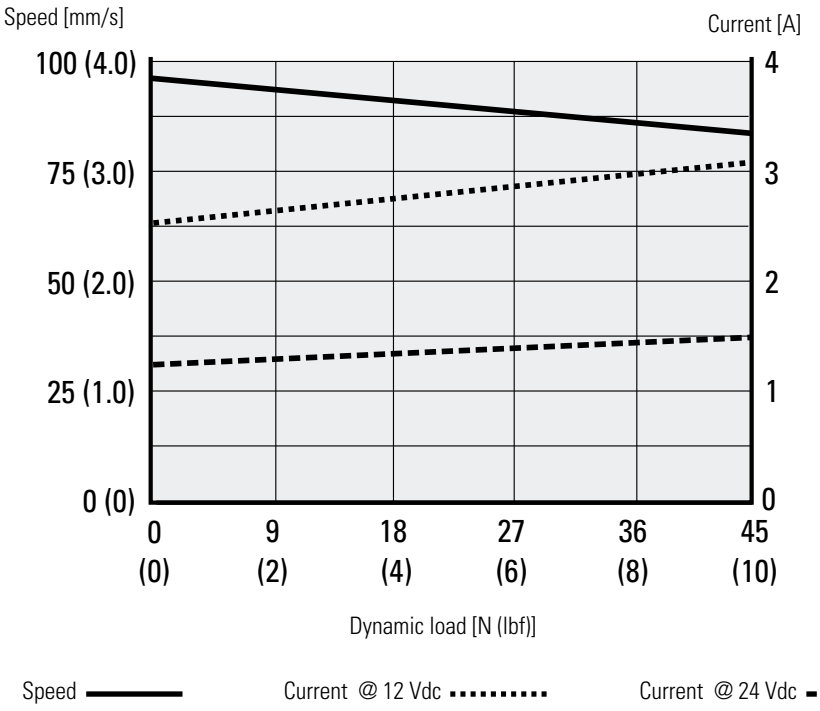

ETxx-174 (130 N (30 lbf), standard speed)

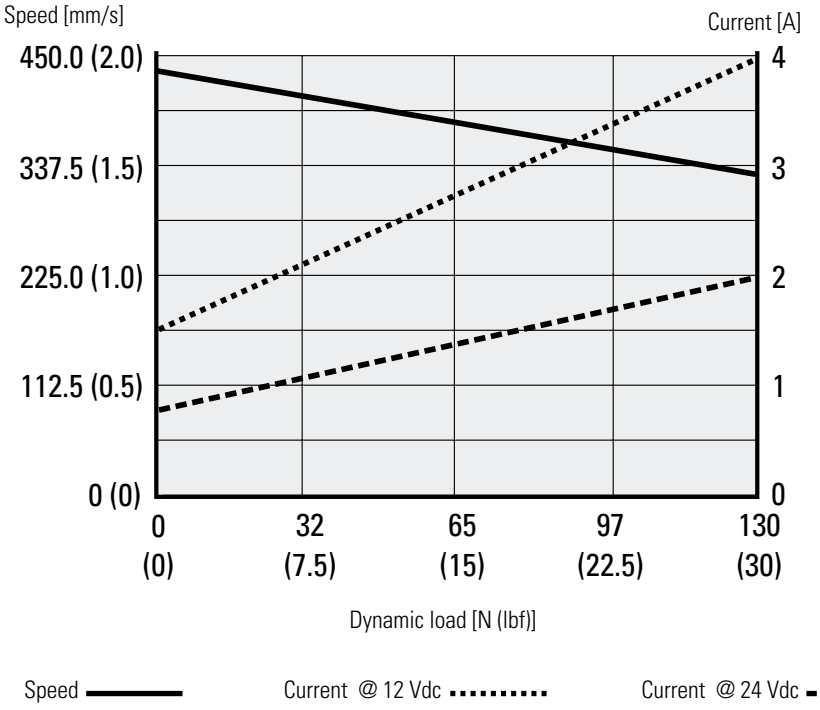

Electrak Throttle – Ordering Key

Ordering Key

1	2	3	4	5	6	7
ET12-	**174-**	**S**	**S**	**NP**	**1**	**S**

1. Model and input voltage
ET12 - = Electrak Throttle, 12 Vdc
ET24 - = Electrak Throttle, 24 Vdc

2. Max. dynamic load and speed version
084 - = 45 N (10 lbf), high speed [1]
174 - = 130 N (30 lbf), standard speed

3. Harness orientation
S = parallel to adapter
R = rotated 90° in housing

S

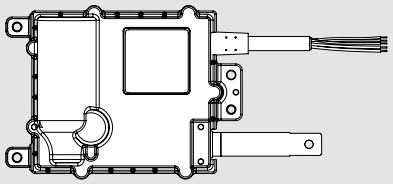

R

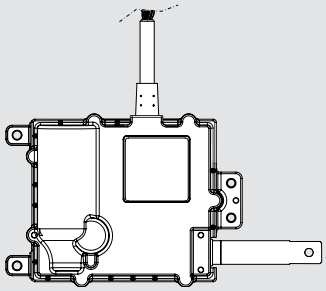

4. Temperature rating
S = standard: -40 (-40) to +85 (+185) °C (F)
E = high temperature: -40 (-40) to +125 (+257) °C (F)

5. Control option
NP = analog position feedback sensor
FN = end-of-stroke limit switches
FP = analog position feedback and end-of-stroke limit switches
CN = SAE J1939 CAN bus

6. Connector option
1 = flying leads
2 = Deutsch DTM04-6P connector

7. Adapter option
S = standard adapter orientation
M = adapter rotated 90°

S

M

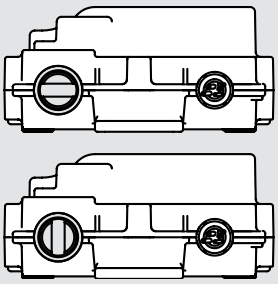

(1) Can only be ordered with high temperature rating (code E in position 4). Note that there is no thermal switch to protect the motor on the high temperature rated models.
(2) The models ET24-174-RECN2S and ET24-084-SECN2S are recommended.

Electrak Throttle – Electrical Connections

Option End-of-Stroke Limit Switches

Actuator supply voltage	[Vdc]	
ET12		12
ET24		24

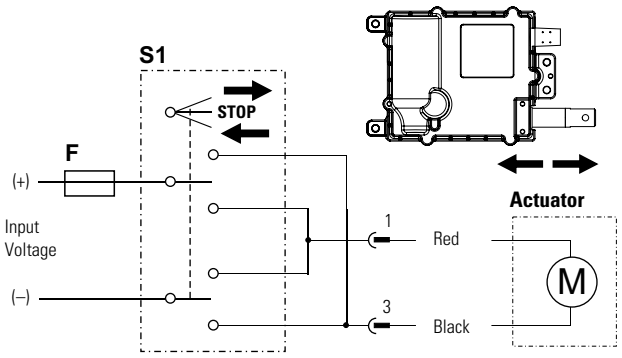

M Actuator motor
S1 Double pole double throw (DPDT) switch
F Fuse

Connect black lead (connector pin 3) to positive and red lead (pin 1) to negative to extend the actuator. Change polarity to retract the actuator. When reaching the ends of stroke, the internal limit switches automatically will stop motion. A clutch is included as a safety feature to stop the motion in case of mid stroke overload.

Option Analog Feedback

Actuator supply voltage	[Vdc]	
ET12		12
ET24		24
Analog feedback type		non-contact
Analog feedback input voltage, max.	[Vdc in]	32
Analog feedback output voltage fully retracted fully extended	[Vdc out]	 < 5 % of VDC in > 75 % of VDC in
Analog feedback output current, max.	[mA]	1
Analog feedback output linearity	[%]	± 1

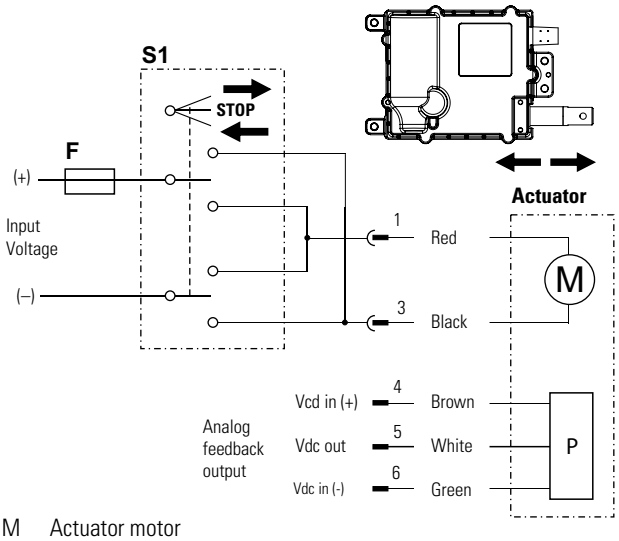

M Actuator motor
S1 Double pole double throw (DPDT) switch
F Fuse
P Analog feedback device

Connect black lead (connector pin 3) to positive and red lead (pin 1) to negative to extend the actuator. Change polarity to retract the actuator. If the actuator should reach the mechanical end of stroke, the built in clutch will stop the motion. The clutch, however, is a safety feature and should not be used as end of stroke control during normal operation.

The analog feedback device is supplied between brown lead (connector pin 4) and green lead (pin 6), while the output signal is on white lead (pin 5).

Electrak Throttle – Electrical Connections

Option Analog Feedback + End-of-Stroke Limit Switches

Actuator supply voltage ET12 ET24	[Vdc]	 9 - 16 18 - 32
Analog feedback type		non-contact
Analog feedback input voltage, max.	[Vdc in]	32
Analog feedback output voltage fully retracted fully extended	[Vdc out]	 < 5 % of VDC in > 75 % of VDC in
Analog feedback output current, max.	[mA]	1
Analog feedback output linearity	[%]	± 1

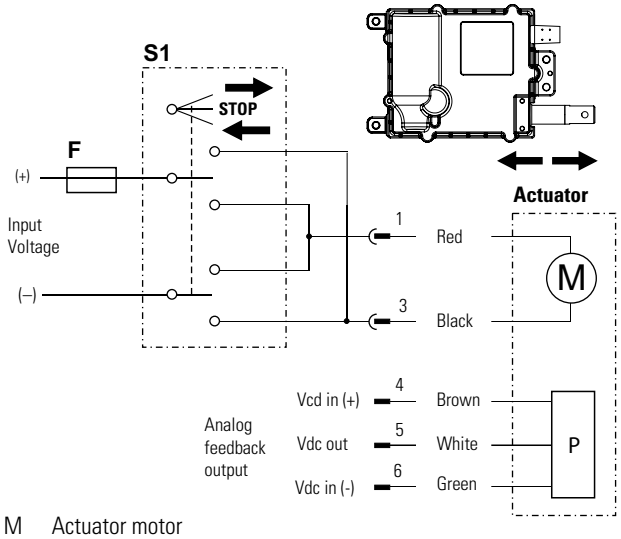

M Actuator motor
S1 Double pole double throw (DPDT) switch
F Fuse
P Analog feedback device

Connect black lead (connector pin 3) to positive and red lead (pin 1) to negative to extend the actuator. Change polarity to retract the actuator. When reaching the ends of stroke, the internal limit switches automatically will stop motion. A clutch is included as a safety feature to stop the motion in case of mid stroke overload.

The analog feedback device is supplied between brown lead (connector pin 4) and green lead (pin 6), while the output signal is on white lead (pin 5).

Option SAE J1939 CAN bus

Actuator supply voltage ET12 ET24	[Vdc]	 12 24
CAN bus signal information		see user manual

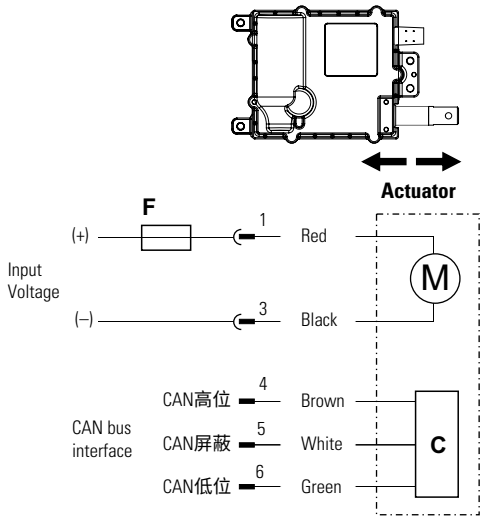

M Actuator motor
S1 Double pole double throw (DPDT) switch
F Fuse
C CAN bus device

Connect red lead to (connector pin 1) to positive and black (pin 3) to negative to power up the actuator. A clutch is included as a safety feature to stop the motion in case of mechanical overload.

The actuator is controlled via the CAN bus interface on brown lead (connector pin 4), white lead (pin 5) and green lead (pin 6).



M-Track Technical Features

Light-duty Actuator

Key features

- Compact design
- High efficiency
- Easy to use and mount

Standard Model
M1

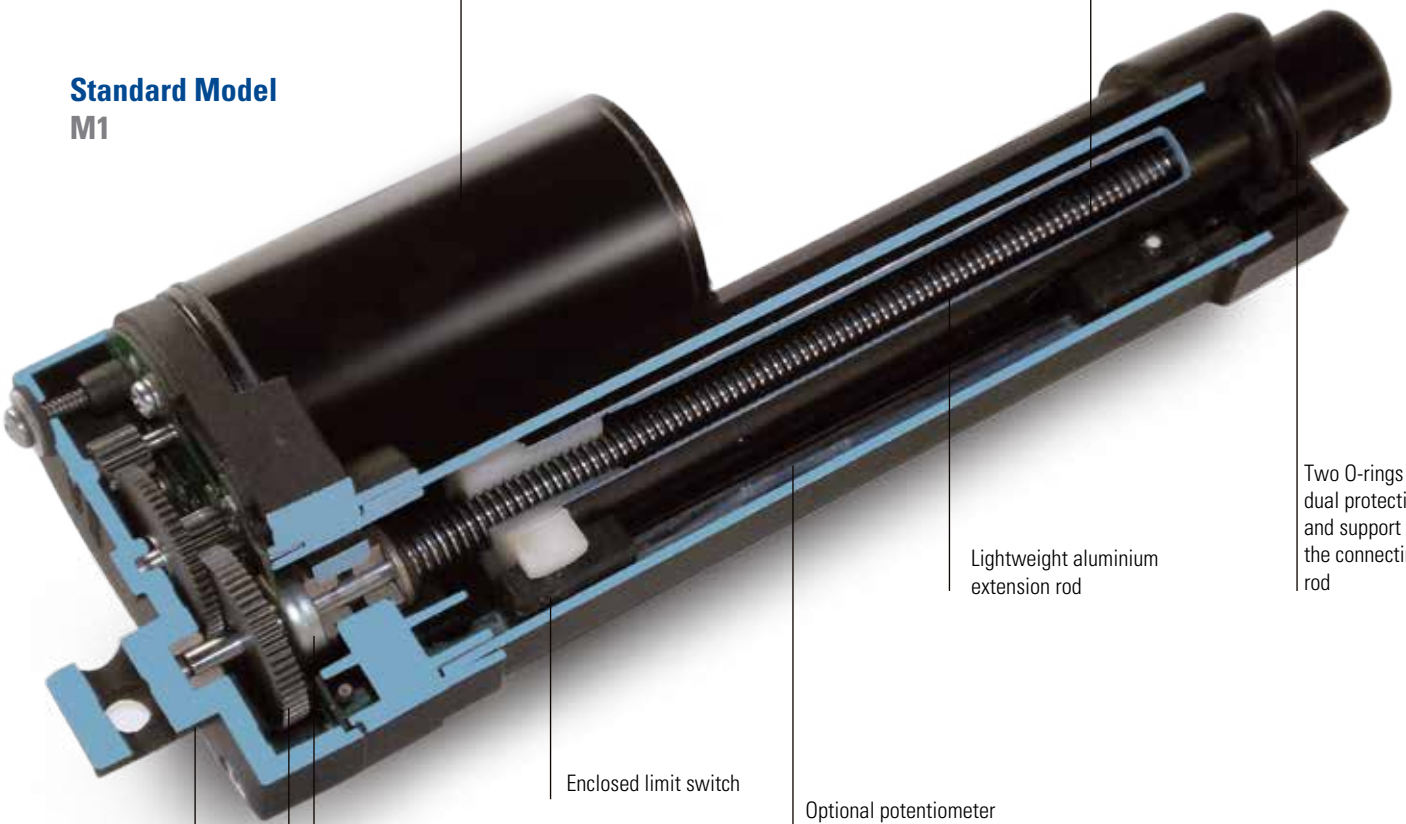






M-Track Configuration

Steps of Sizing and Selection

Step 1: Determine the required load and stroke length
Use the sizing and selection tool to find the right model, and determine the load and stroke length for your applications.

Step 2: Determine the motor type and voltage
Select the DC motor and motor voltage.

Step 3: Determine the speed and current
Based on the drawings of your applications, determine the speed and current that meet your requirements.

Step 4: Determining the duty cycle

At full rated load, the electric actuator's duty cycle shall not exceed 25 per cent.

$$\text{Duty cycle} = \frac{\text{on time}}{\text{(on time + off time)}}$$

For example, if an actuator runs for 15 seconds, it should be switched off for at least 45 seconds.

Important Note

Side load and shock load must be taken into account during the operation of actuators. Side loads should be eliminated either through appropriate design or by avoiding cantilevered mounting because they can significantly reduce the service life of the devices. Shock loads shall also be minimized, though the actuators can handle some minor shock loads.

Step 5: Options
The standard features of the M-Track actuator include the end-of-stroke limit switches. For position feedback, a 12K linear membrane potentiometer can be installed at the factory. The operators can monitor the position of the concealed actuator via changes in resistance value.

M-Track Configuration

M1 – D012 – 0050 – A 02 – L P

Actuator Model
M1 – M-Track 1

Motor voltage option
D012– 12 Vdc
D024– 24 Vdc

Load capacity
0025 – 25 lbs (111 N)
0050 – 50 lbs (222 N)
0100 – 100 lbs (445 N)
0165 – 165 lbs (734 N)
Note: The rated loads listed above do not apply to all models. Contact us for further details.

Screw Type
A = lead screw

Stroke length
01 – 1 inch (25 mm)
02 – 2 inches (50 mm)
04 – 4 inches (100 mm)
06 – 6 inches (150 mm)
08 – 8 inches (200 mm)
10 – 10 inches (254 mm)
12 – 12 inches (300 mm)
Note: The stroke lengths listed above do not apply to all models. Contact us for further details.

Limited switch option
L – Limited switch included

Potentiometer
P – With potentiometer
N – Without potentiometer

For details on how to order the protective covers, contact the manufacturer.

M-Track 1

DC motors for lead screw



Rated load up to 165 lbs (734 N)
Stroke speed up to 1.75 in/s (45 mm/s)

The M-TRACK 1 compact linear actuator is a fully self-contained unit, making it an ideal choice for use in confined spaces without compromising its power or load capacity. With its load and stroke capabilities, the M-TRACK 1 actuator provide a solution for a wide range of intermittent applications.

Functionally, the M-Track 1 actuator, designed for intermittent operations, can be easily interchanged with hydraulic or pneumatic cylinders of similar dimensions. The actuator maintains consistent high performance under harsh operating conditions, such as extreme temperatures, high humidity, and dusty environments.

Key Features

- Lead screw drive, with load capacity of up to 165 lbs (734 N) and min. extension rate of 0.25 in/s (6.35 mm/s).
- Protective housing made of aluminium-zinc alloy for corrosion resistance and protection against dirt, dust and moisture.
- Operating temperature limits: –40°F to +185°F (–40°C to +80°C)
- Available in standard stroke lengths of 1, 2, 4, 6, 8, 10 and 12 inches (50, 100, 150, 200, 254 and 300 mm).
- Internal limit switches automatically shut off the unit when the end of stroke is reached.
- Optional potentiometer provides position feedback.
- IP IP69K - static, IP65 - dynamic.
- The actuator does not rotate during operation, but rotatable for easy installation.
- With protective cover for temporary immersion (see P-1581-WE for more information).

Typical Applications

Suitable for light load or short stroke applications, such as:

- Valve and vent adjustment
- Light-load tilting or lifting positioning
- Vise clamping operations

Technical Specifications

Load capacity	25 lbs (45 N)	50 lbs (222 N)	100 lbs (445 N)	165 lbs (734 N)
Speed @ max. load	1.75 in/s (45mm/s)	0.80 in/s (20mm/s)	0.45 in/s (11mm/s)	0.25 in/s (6mm/s)
Input voltage	12 or 24 Vdc			
Static load capacity	300 lbs (1350 N)			
Stroke length	1,2,4,6,8,10 and 12 inches (50, 100,150, 200, 254 and 300mm)			
Mounting pin hole	0.25 inches (6.4 mm) in diameter			
Duty cycle	25%			
Operating temperature limits	–40°F to +185°F (–40°C to +80°C)			
IP rating	Dynamic IP65, IP69K and temporary immersion with protective housing			
Limited switch	Integrated unadjustable limited switch as standard			
Potentiometer	Optional linear membrane potentiometer			

M-Track 1

Dimensions

Stroke length	in	mm	in	mm	in	mm	in	mm	in	mm	in	mm
	2	50	4	100	6	150	8	200	10	254	12	300
"A"Retracted stroke (without potentiometer)	6.22	158.0	8.23	209.0	10.24	260.1	12.24	310.9	14.25	362.0	16.26	413.0
"A"Retracted stroke (with potentiometer)	7.55	191.8	9.57	243.1	11.57	293.9	13.58	344.9	15.58	395.7	17.58	446.5

Note: Special stroke lengths are available; the metric stroke lengths are for reference only.

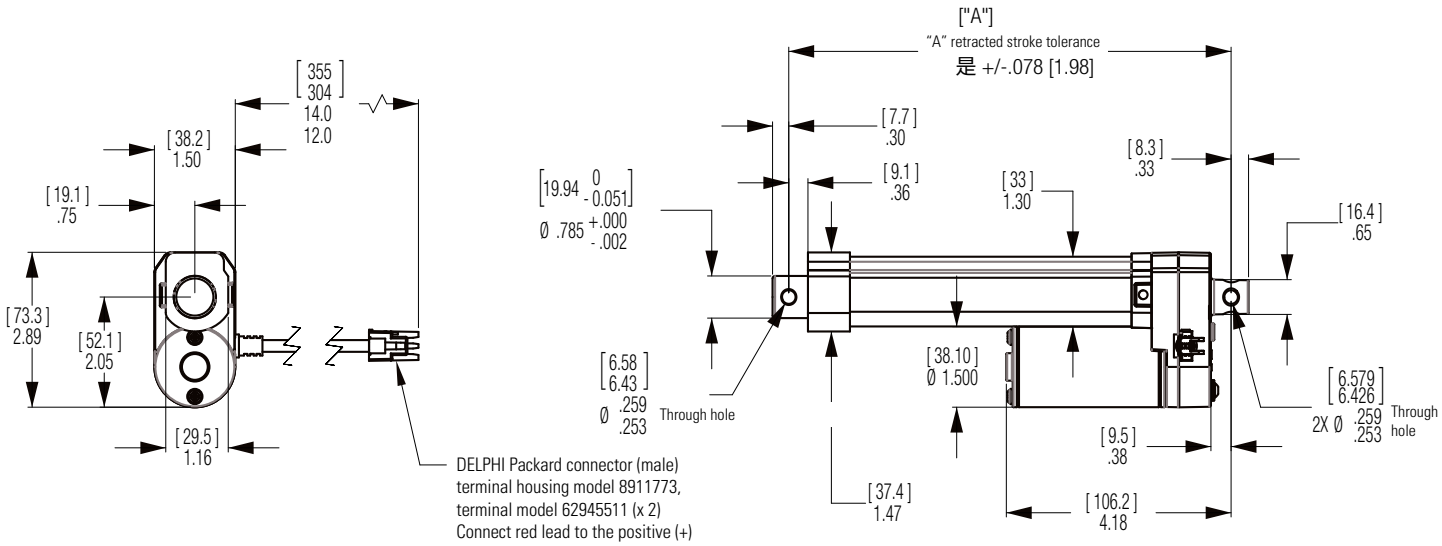

All dimensions are nominal values, unless otherwise stated.

Imperial dimensions are shown, with metric equivalents in brackets.

- Stroke lengths and tolerances are based on a rated DC voltage of ±0.5 volts at a controlled temperature of 70°F and without any additional load. Note: Normal wear and tear, variations in temperature and load may all affect stroke tolerances. Stroke tolerances are critical to the performance of the selected actuator under specific operating conditions.
- The point-to-point dimensions for extending and retracting operations and their tolerances are based on a rated DC voltage of ±0.5 volts at a controlled temperature of 70°F and without any additional load. Note: Normal wear and tear, variations in temperature and load may affect the tolerances. The point-to-point dimensions for extending and retracting operations are critical to the performance of the selected linear actuator under specific operating conditions.
- The extension tube can be rotated a full circle for easy installation. Rotate the actuator clockwise until it is fully mounted on the devices; or rotate it anticlockwise by no more than one full circle to align with the U-clamp. When selecting the mounting position, it shall be ensured that the actuator can extend and retract fully so that the internal limit switches can operate. If this cannot be achieved, an alternative method must be used to stop the actuator.
- If the actuator is obstructed during its operation and unable to reach the internal limit switch, it will stop. Should the duty cycle be exceeded, an internal thermal circuit breaker will activate to protect the motor from damage in the event of a stoppage or overheating. If the system is tilted, it will automatically restart after a short period. The thermal rating is designed to protect the motor in the event of a stoppage, and is not intended to protect other components within the circuit.
- Warner Linear recommends installing an external fuse rated up to 6 A when using 12-Vdc, and a fuse rated up to 3 A when using 24-Vdc. Any devices connected to the actuator must either be within the actuator's power rating or be isolated from the actuator's circuit.

Speed
Current draw

Performance Diagrams Imperial
Measured values*

*The measured values shown in the performance diagrams are nominal values

Load capacity 25 lbs.

*For **metric measured values**, see page 12.*

M1-D012-0025

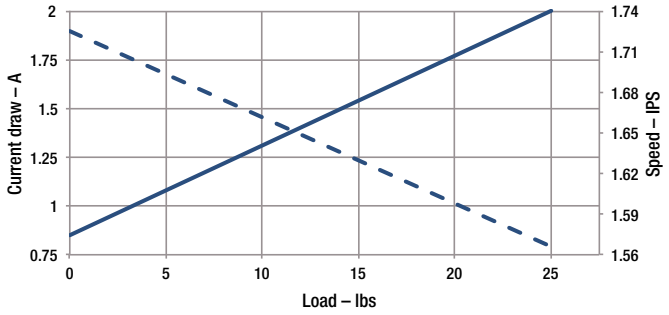

M1-D024-0025

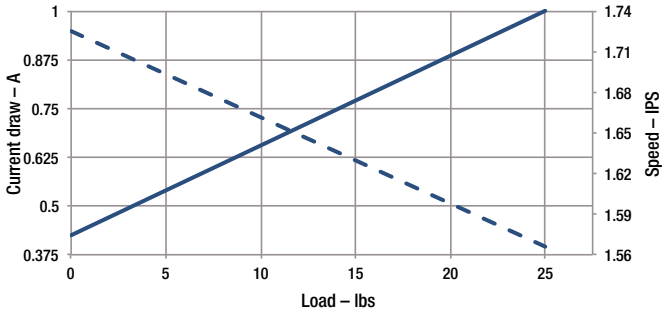

Load capacity 50 lbs.

*For **metric measured values**, see page 12.*

M1-D012-0050

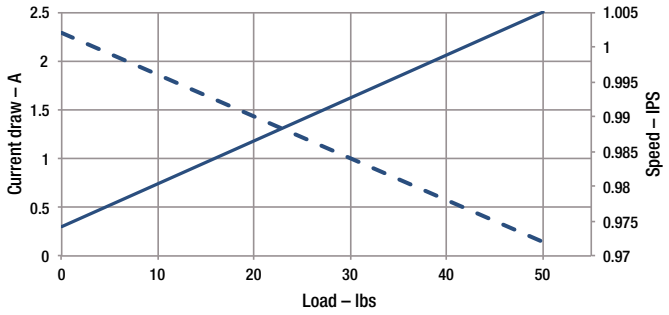

M1-D024-0050

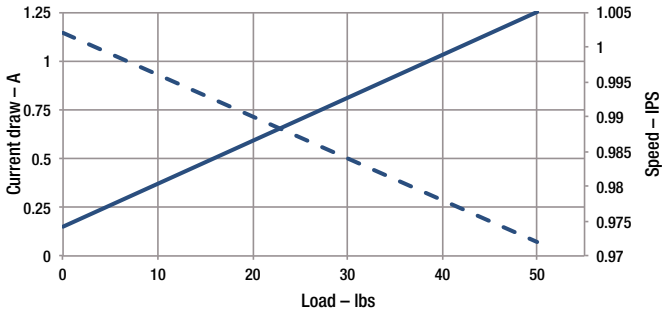

Load capacity 100 lbs.

*For **metric measured values**, see page 12.*

M1-D012-0100

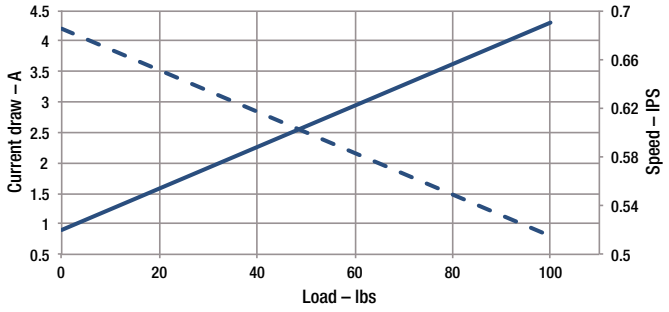

M1-D024-0100

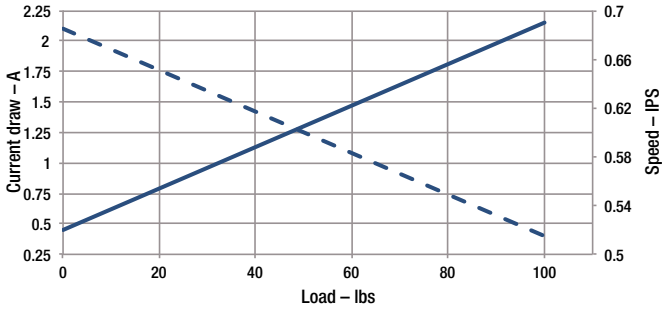

Load capacity 165 lbs.

*For **metric measured values**, see page 12.*

M1-D012-0165

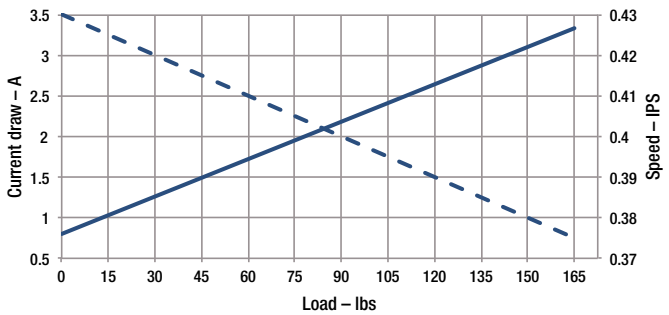

M1-D024-0165

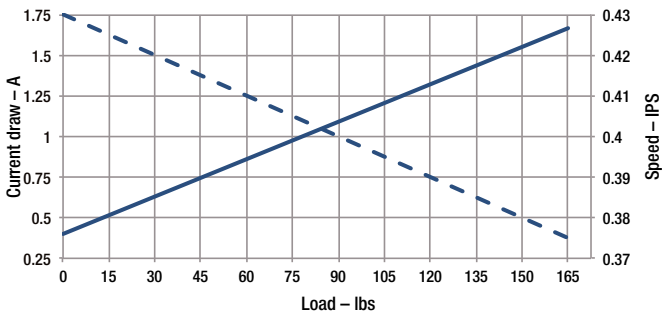

M-Track 1

Performance Diagrams Metric

Speed
Current draw

Measured values*

* The measured values shown in the performance diagrams are nominal values

Load capacity 111 N

*For **imperial measured values**, see page 11.*

M1-D012-0025

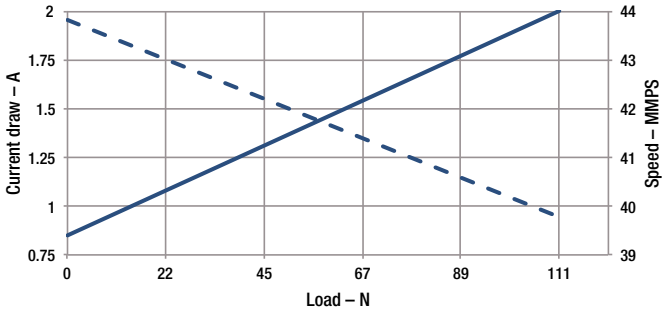

M1-D024-0025

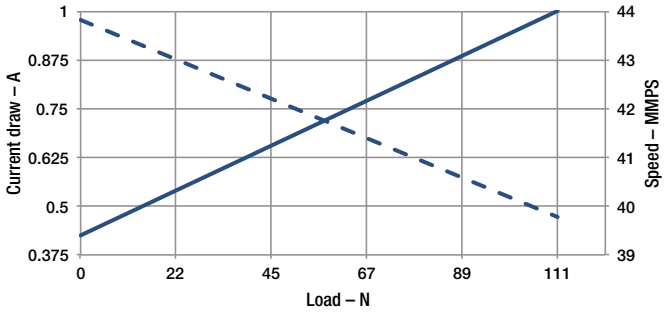

Load capacity 223 N

*For **imperial measured values**, see page 11.*

M1-D012-0050

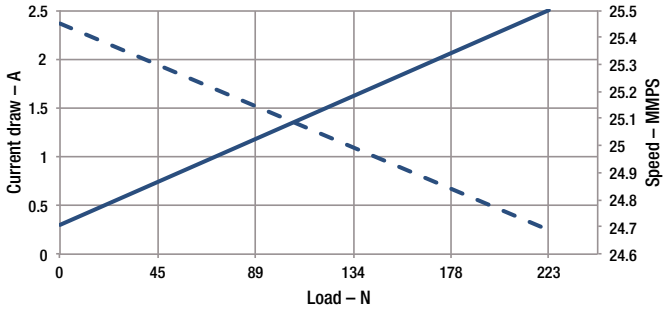

M1-D024-0050

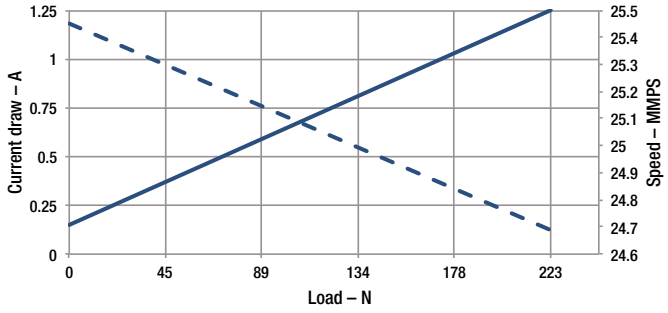

Load capacity 445 N

*For **imperial measured values**, see page 11.*

M1-D012-0100

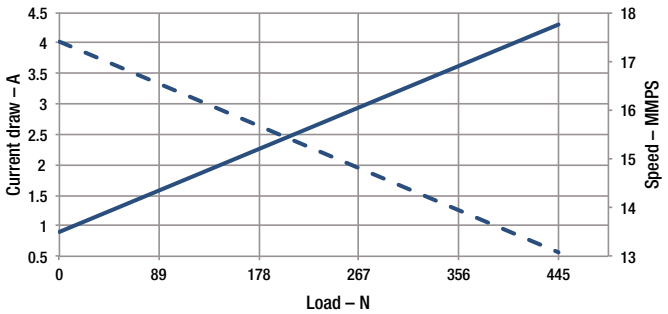

M1-D024-0100

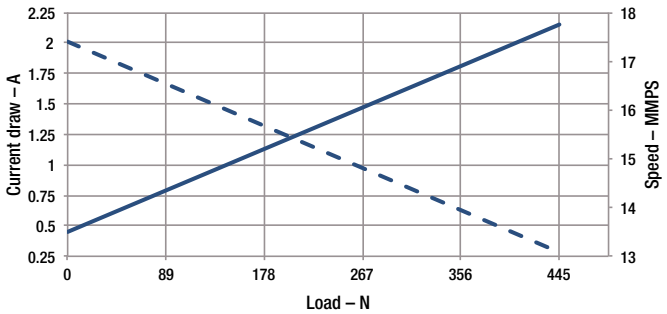

Load capacity 734 N

*For **imperial measured values**, see page 11.*

M1-D012-0165

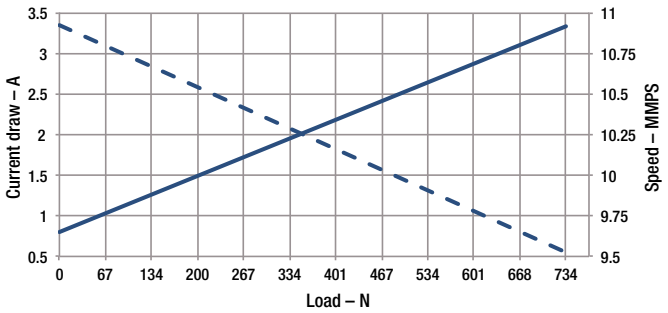

M1-D024-0165

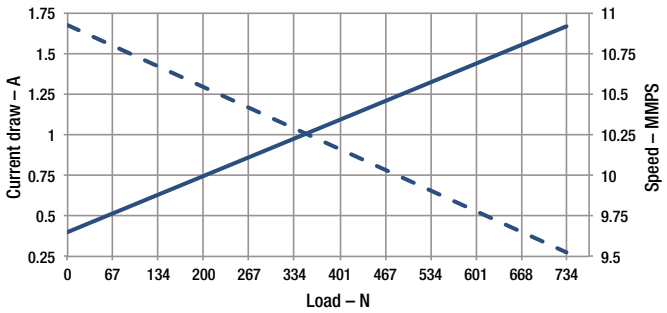

Electrical Connections

The actuator is delivered with a connector mounted on the unit and a coupling connector included in the packaging.

M-Track 1 (with limited switch)

Using 16 AWG wire

Packard (Delphi) connectors

Connector	8911773
Connector terminal	6294511 (2 pieces required)
Socket	8911772
Socket terminal	12040508 (2 pieces required)

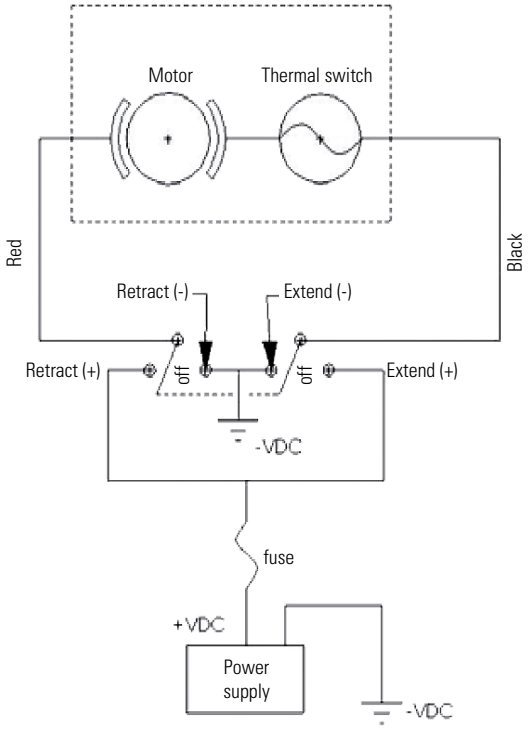

M-Track 1 (with potentiometer feedback)

Using 16 AWG wire

Packard (Delphi) connectors

Connector	8911773
Connector terminal	6294511 (2 pieces required)
Socket	8911772
Socket terminal	12040508 (2 pieces required)

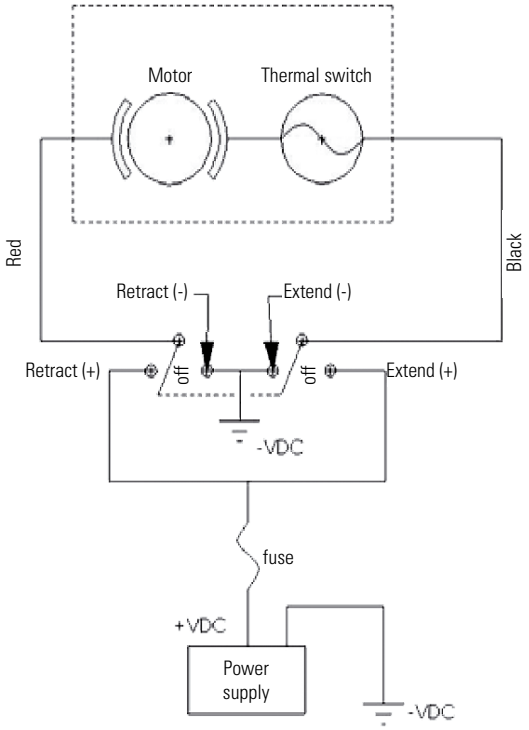

Lead color	Lead cross section	Connected to	
white	22 AWG	10 K	
purple	22 AWG	Feedback	potentio-meter
yellow	22 AWG	0 OHM	

Potentiometer connection

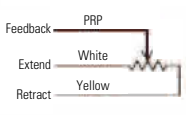

Glossary

Acme Screw
Acme screws are self-locking and will not back-drive. They also withstand vibration and shock better than ball or worm screws and are used for applications with these characteristics. Also see “lead screw”.

Actuator Housing
The actuator housing provides environmental protection for the internal components and may also be a structural member of the actuator.

Adapters
The front and rear adapters are the connection points for mounting most Thomson actuators. The front adapter is usually a cross hole but optionally may be a tapped hole, threaded rod, or universal rod end. The rear adapter may be cast into the actuator housing or held in place with a nut.

Adjustable End of Stroke Limit Switches
The adjustable end of stroke limit switches may be moved to positions inside the full stroke of the actuator and will shut off the actuator when it reaches the limit switch. Also see “end of stroke limit switches”.

Anti-coast Brake/Electrical Brake
Depending on the load, AC ball screw actuators may coast to a stop when power is removed. This overrun is eliminated by an anti-coast brake or an electrical brake. The anti-coast brake (pawl type) will allow up to one revolution of the motor after power is removed. They are used on the Electrak 10 AC. An electrical brake (electrically released) operates much faster after power is removed and allow less coast than the pawl type. Also see “brake”.

Anti-rotation Mechanism
A feature available on some actuators that resolves the restraining torque within the actuator. The extension tube will not rotate on actuators with this feature when driven without having the ends fixed.

Auto Reset Thermal Switch
An auto reset thermal will switch off the motor if it becomes too warm which means that the motor has exceeded its maximum allowed duty cycle. When the motor has cooled off, the switch will close again automatically, and the motor will start to run if power is still being applied to it. Also see “duty cycle”.

Ball Screw
Ball screws are highly efficient and are used for high loads and speeds. Also see “lead screw”.

Brake
Actuators using an acme or worm screw are inherently self-locking, while ball screw driven actuators are not. To prevent ball screw actuators from backdriving, they incorporate an anti backdriving brake (holding brake). Ball screw actuators with an AC motor can also be equipped with an anti-coast brake. Also see “Anti-coast brake/ electrical brake“ and “holding brake”.

Capacitor
AC actuators use permanent split capacitor motors and require the use of a start/run capacitor in the control circuit to operate. The controls for AC actuators have the capacitor included in the control. For customer supplied controls, a separate capacitor is required, and the part number is included on the actuator product page.

CE Compliance and Certification
All actuators sold in the EU are CE compliant, while some actuators sold outside of the EU may not be. If you order your actuator outside of the EU and need a CE compliance, contact the factory to verify availability and be sure to include the request on your order. Most AC actuators are UL listed as standard. UL has no standard for DC actuators under 48 Vdc.

Compression Loads
See “Tension and Compression Loads”.

Controls
Controls can be external to the actuator and provide the actuator with the correct voltage, have either membrane or pendant operators, and some have position indicators.

Cover Tube
The cover tube provides protection for the lead screw and provides protection and support for the extension tube. For the Electrak PPA, the cover tube also provides the rear mounting connection.

Customization
Even the most versatile actuator may not always suit all applications. But whatever your need is, our engineers are ready to help you to customize the actuators according to your requirements. We build more exclusive actuators than anyone else and have decades of experience in producing actuators to meet special needs.

Glossary

Duty Cycle

$$\text{Duty Cycle} = \frac{\text{on time}}{(\text{on time} + \text{off time})}$$

Example: 15 seconds on, 45 seconds off

$$\frac{15\text{ s}}{(15\text{ s} + 45\text{ s})} = 25\%\text{ duty cycle}$$

The duty cycle is a function of the maximum rated load and the ambient temperature. Ambient temperatures above the stated will affect the duty cycle negatively, while lower temperatures and/or lower load will affect it positively. Also see “on-time”.

Dynamic Load

The dynamic load rating is how much load the actuator will move when power is applied. Also see “load rating”.

Dynamic Braking

Dynamic braking is a feature which short circuits the motor windings at power off, resulting in a shorter coasting distance before the actuator comes to a complete stop. Dynamic braking can be accomplished on other DC actuators by wiring the control to short the motor leads when power is removed.

Electronic Limit Switches (ELS)

Electronic Limit Switches is a current sensing function used in some actuator control models. The ELS senses the current and if it exceeds a preset level, the control cuts the power to the motor. This function can be used to detect and stop at the ends of the actuator stroke or to stop the actuator if it runs into an obstacle.

Electronic Load Monitoring (ELM)

A built-in microprocessor inside the actuators continuously monitors the performance of the actuator. The microprocessor will stop the movement at the end of stroke, in case of mid stroke stall, at overload conditions or if the duty cycle is too high. It also eliminates the need of a clutch and provides dynamic braking.

Encoder Feedback

Encoders provide a digital output signal that can be used to determine the position of the extension tube. An encoder equipped actuator must return to a “home” position if power is removed and restored in order to reset its starting point. Also see “potentiometer feedback”.

End of Stroke Limit Switches

End of stroke limit switches are incorporated in some actuator models, either as standard or as an option, that will shut off power when the end of stroke is achieved. Also see “fixed end of stroke limit switches” and “adjustable end of stroke limit switches”.

End Play (Backlash)

The stack up of tolerances within the lead screw assembly and gearing allowing some linear movement of the extension tube without rotating the motor. Typical end play or backlash varies by model. The range is 0.3 to 2.0 mm (0.012 - 0.08 inch).

Extension Tube

The extension tube slides in and out of the actuator and is connected via the front adapter to the load being moved or positioned.

Fixed End of Stroke Limit Switches

The fixed end of stroke limit switches allow the full stroke of the actuator to be used and will shut off power when the end of stroke is achieved. Also see “end of stroke limit switches”.

Holding Brake

All acme, worm or trapezoidal screw driven actuators are inherently self-locking, while ball screw driven ones incorporate an anti backdriving brake (holding brake) that engages when the actuator has come to a complete stop. Also see “brake“.

Input Voltage

The nominal voltage required to operate the actuator. All actuators will accept at least a ± 10% variation of the nominal voltage, but a change in the voltage will result in a change of the speed of DC actuators. Controls are available that accept 115 or 230 Vac input and provide 24 Vdc output to operate 24 Vdc actuators.

Inrush Current

Inrush current is a short current peak that appears at the start of an actuator as the motor tries to get the load moving. Typically, the inrush current will last between 75 to 150 milliseconds and can be up to three times higher (on a low-level switched actuator 1.5 times higher) than the current for the actuator and load. Batteries have no problem delivering the inrush current, but if using an AC power supply, it is important to size it to handle the inrush current.

Installation Instructions

Each actuator has an installation manual to answer typical questions about mounting and wiring the actuators.

IP Rating

See “protection class”.

Lead Screw

Actuators use four different types of lead screws depending on the configuration and load requirements of the actuator. Ball screws are highly efficient and used for high loads and speeds. Acme, worm and trapezoidal screws are self-locking and will not backdrive. Acme and trapezoidal screws withstand vibration and shock better than the other and are used for applications with these characteristics.

Glossary

Lifetime Expectancy
Life is very complex to calculate and depends on many parameters. Some of the more important parameters includes load, stroke length, operation temperature and how often the overload clutch is operated. Contact customer service for more information.

Lifting Columns
Lifting columns provide a stable base for adjusting the height of tables or platforms. The column provides both the lifting force and the ability to resolve high moment forces from off axis loads.

Linear Actuators
Actuators providing a linear thrust via an extension tube to lift, lower, push, pull or position a load.

Load Rating
The load rating is the minimum amount of force the actuator will provide during its lifetime. The load rating of all rod style actuators is the same for both compression and tension loads. Also see “dynamic load”, “static load” and “tension and compression load”.

Low Level Switching
Low level switching allows you to control the direction of the actuator motion by using low level inputs on the actuator instead of having to switch the much higher motor current.

Manual Override (Hand Wind)
Allows manual operation of the actuator in both directions in case of a power failure. The actuator accepts a standard hexagon key to rotate the motor in either direction. Optional on some models.

Maximum On Time
The maximum amount of time an actuator may operate without stopping to “cool off”. For high load and long stroke actuators, this may be one extend and retract cycle. The actuator should not exceed 25% duty cycle at full rated load. If no maximum on time is stated, the maximum on time is equal to one full cycle at the maximum dynamic load for the actuator in question.

Mounting
Electrak® actuators are quickly and easily mounted by slipping pins through the holes on each end of the unit and into brackets on the machine frame and the load. PPA actuators are mounted by the rear trunnions on the cover tube and the clevis on the extension tube. Solid pins provide maximum holding strength, and a retaining or cotter pin on each end will prevent the pin from falling out of its mounting bracket. Roll or spring type mounting pins should be avoided. The mounting pins must be parallel to each other as shown (Fig. a). Pins which are not parallel may cause the actuator to bind. The load should act along the axis of the actuator since off center loads may cause binding (Fig. b).

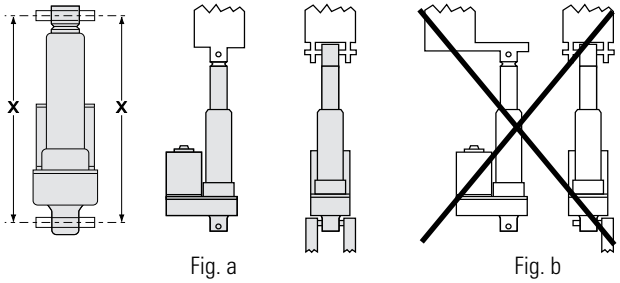

Fig. a Fig. b

Non-driven Actuators
Actuators supplied without a motor and driven manually or by a customer supplied motor.

On-time
The on-time is the time that the motor runs for between two stops. The maximum on-time is the maximum time the motor is allowed to run for between two stops. Sometimes the maximum on-time is the limiting factor rather than the duty cycle rating. Also see “duty cycle”.

Operating and Storage Temperature
The operating temperature is the range in which the actuator may be safely operated. For the high end of the range, the duty cycle will be lower than 25%. All actuators can be stored or transported at the same temperature as the operating temperature. Contact customer support if the operating temperature will be exceeded during storage or transportation.

Overload Clutch
Electrak 050, GX and PPA Series linear actuators are protected by a load limiting mechanical clutch which prevents the motor from stalling at either end of the actuator stroke. It will also slip when the factoryset load limit is exceeded. The clutch is a ball detent design, assuring a consistent slip point and long life.

Potentiometer Feedback
Potentiometers provide an analog output signal that can be used to determine the position of the extension tube. A potentiometer will “remember” its position if power is removed and restored. Also see “encoder feedback”

Protection Class (Ingress Protection)
The protection class refers to the environmental ingress protection rating of the enclosure. International Protection Marking (IP) ratings are commonly referenced standards that classify electrical equipment using standard tests to determine resistance to ingress of solid objects and liquids. The first digit applies to airborne contaminants and the second digit (and sometimes a third letter) to water/moisture.

Glossary

IP33: protected against the penetration of solid objects with a diameter greater than 12 mm and against direct sprays of water up to 60 degrees from vertical.
IP44: protected against the penetration of solid objects with a diameter greater than 1 mm and against water sprayed from any direction.
IP45: protected against the penetration of solid objects with a diameter greater than 1 mm and low pressure water jets from any direction.
IP51: protected from dust and vertical dripping water/condensation.
IP52: protected from dust and dripping water/condensation falling at an angle up to 15 degrees from vertical.
IP56: protected from dust and high pressure water jets from any direction.
IP65: dust tight and protected against low pressure water jets from any direction.
IP66: dust tight and protected against high pressure water jets from any direction.
IP67: dust tight and protected against the effect of immersion in water between 150 mm (5.9 inch) and 1 meter (39.4 inch).
IP69K: dust tight and protected against the effect of high pressure washing with hot water from any direction.

Pulse Width Modulation (PWM)

Pulse width modulation control works by switching the power supplied to the motor on and off rapidly. The DC voltage is converted to a square-wave signal, alternating between fully on and zero, giving the motor a series of power "kicks". If the switching frequency is high enough, the motor runs at a steady speed due to its fly-wheel momentum. By adjusting the duty cycle of the signal (modulating the width of the pulse, hence the 'PWM'), the time fraction it is "on", the average power can be varied, and hence the motor speed. Note: Actuators with built-in electronics and CE filters will be affected negatively by the PWM modulation and should not be used together. Contact customer support for more information.

REACH

REACH is a European Union regulation concerning the Registration, Evaluation, Authorization and restriction of Chemicals. It makes manufacturers and importers who place chemicals on the market responsible for understanding and managing the risks associated with their use.

Restraining Torque

The torque which is developed between the clevis on the extension tube and rear mount (clevis or trunnion) when the unit extends or retracts and ratchets the clutch (Fig. c). This means that if the ends are not fixed by a method that can handle the restraining torque, the extension tube will rotate instead of moving. However, units with antirotation mechanism are internally restrained and can therefore be run in and out without having to be fixed in the ends. Also see "antirotation mechanism".

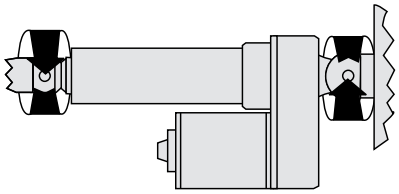

Fig c

Rodless Actuators

Rodless actuators provide support for the load as well as thrust. The load is supported and moved by a carriage on the actuator rather than pushed or pulled by an extension rod. Rodless actuators are ideal for applications requiring long strokes (up to 1500 mm), high speeds (up to 110 mm/s), movement of the load within the shortest envelope possible or the load supported by the actuator.

RoHS Compliance

All actuators, controls and accessories sold in the EU are RoHS compliant unless otherwise stated, while products sold outside of the EU may not be. If you order an actuator outside of the EU and need it to be RoHS compliant, contact the factory to verify availability and be sure to include the request on your order.

Rotary Actuators

Actuators providing a rotary output to position a load, turn a winch, or rotate a gear or sprocket.

Service and Maintenance

Actuators are generally maintenance free. Electrak GX have repair kits available from your local distributor or OEM.

Side Loading

Side loading occurs when the extension tube/moving member is subjected to loads from the side. Most actuators cannot handle any side loads, and a proper design of the application should eliminate any side loads or keep it within the permissible limits.

Sizing and Selection

The Thomson web site (www.thomsonlinear.com) includes an online tool that can be used to walk through the decision process for picking the best actuator and get the ordering data for your choice.

Speed

DC actuators have a direct load/speed relationship. As the load increases, the speed decreases. There are curves on each product page to show the speed from no load to full rated load. AC actuators have little speed fluctuations based on load but there are load/speed curves on all the AC actuator product pages.

Glossary

Spline Safety Function

An optional safety function on the rodless actuator (LM80) that will stop downward motion in case the carriage (the moving member) collides with an obstacle. The motor will keep, running but the carriage will stand still and not pull down on the obstacle. When reversing the motor rotation, the carriage will automatically start to move upwards again.

Static Load

The static load rating is how much load the actuator will hold with power off. The static load rating is normally twice the dynamic load rating. Also see “load rating”. If nothing else is stated, the static load rating is for the actuator extension tube being fully retracted. The static load rating will decrease as the tube extends.

Synchronous Operation

Normally motor speed cannot be controlled with enough precision to ensure that the actuators will remain synchronized, and a binding effect could take place. However, there are some solutions. Non-driven actuators may be mechanically linked and thereby synchronized. Actuators equipped with an encoder can be synchronized using controls designed for synchronous operation as long as there is no onboard electronics preventing PWM operation.

Tension and Compression Load

A tension load tries to stretch the actuator, and a compression load tries to compress the actuator (Fig. d). Most actuators can manage the same tension and compression load. Also see “load rating”. With bi-directional loads, the end play of the actuator extension tube may need to be taken into consideration when using the actuator for positioning tasks.

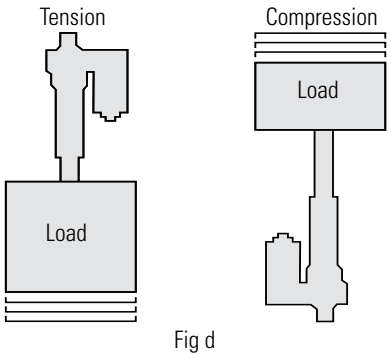

Fig d

Trapezoidal Screw

Screw type with similar characteristics as an acme screw. This type of screw is used in LM80. Also see “acme screw” and “lead screw”.

Vent Tube

Electrak® 050 actuators have a breather tube in the wiring harness to allow the actuator to operate without creating a vacuum and drawing water through the seals on the cover tube.

Voltage Drop

Long leads/cables between the power source and the actuator will result in a voltage drop for DC units. This voltage drop can cause malfunction and are avoided by sizing the leads in accordance with the following lead cross section selection table. The table is based on an ambient temperature of 30 °C (86 °F) or less. A higher ambient temperature may result in the need for a greater lead cross section.

Lead Cross Section Selection Table [mm² (AGW)]

Current draw [A]	Cable length [m]	Actuator input voltage [Vdc]		
		12	24	36
0 - 10	0 - 3	2.5 (14)	1.5 (16)	1.5 (16)
	3 - 6	2.5 (14)	1.5 (16)	1.5 (16)
	6 - 10	1.5 (16)	2.5 (14)	1.5 (16)
10 - 15	0 - 3	2.5 (14)	2.5 (14)	1.5 (16)
	3 - 6	2.5 (14)	2.5 (14)	1.5 (16)
	6 - 10	2.5 (14)	-	-
15 - 20	0 - 3	2.5 (14)	-	-
	3 - 6	6 (12)	-	-
	6 - 10	2.5 (14)	-	-
20 - 28	0 - 3	6 (12)	-	-
	3 - 6	10 (8)	-	-
	6 - 10	6 (12)	-	-
28 - 35	0 - 3	6 (12)	-	-
	3 - 6	10 (8)	-	-
	6 - 10	10	-	-

Worm Screw

Worm screws are self-locking and will not back-drive. This type of screw is used in Electrak 050, Throttle and Max Jac. Also see “lead screw”.

Contact us or any of our 2000+ global distribution partners by scanning the code below or visiting www.thomsonlinear.com/contact



RegalRexnord™

www.regalrexnord.com

www.thomsonlinear.com

Linear_Actuators_CTEN-0017-01 | 20230228TJ
Specifications are subject to change without notice. It is the responsibility of the product user to determine the suitability of this product for a specific application. All trademarks property of their respective owners.
©2026 Thomson Industries, Inc. | 2400 Curtiss Street, Downers Grove, IL 60515 USA

THOMSON®